Protected by copyright. Copyright for private or commercial purposes, in part or in whole, is not permitted unless authorised by Volkswagen AG. Volkswagen AG does not guarantee or accept any liability with respect to the correctness of information in this document. Copyright by Volkswagen AG.

Polo 1995 ➤

Radio, telephone, navigation

Edition 10.1999

satelettronica

List of Workshop Manual Repair GroupsList of Workshop Manual Repair GroupsList of Workshop Manual Repair Groups

Polo 1995 ➤

Radio, telephone, navigation

Repair Group

01 - Self-diagnosis

91 - Radio, telephone, navigation

Protected by copyright. Copying for private or commercial purposes, in part or in whole, is not permitted unless authorised by Volkswagen AG. Volkswagen AG does not guarantee or accept any liability with respect to the correctness of information in this document. Copyright by Volkswagen AG.

satelettronica

Technical information should always be available to the foremen and mechanics, because their careful and constant adherence to the instructions is essential to ensure vehicle road-worthiness and safety. In addition, the normal basic safety precautions for working on motor vehicles must, as a matter of course, be observed.

All rights reserved.
No reproduction without prior agreement from publisher.

Copyright © 2010 Volkswagen AG, Wolfsburg

00050208320

Contents

01 - Self-diagnosis 1
1 Self-diagnosis 1
1.1 Self-diagnosis 1
1.2 Tools 1
1.3 Connecting fault reader 2
2 Self-diagnosis for radio generation 10.99 > 4
2.1 Self-diagnosis for radio generation 10.99 > 4
2.2 Performing self-diagnosis 4
2.3 Final control diagnosis 9
2.4 Coding "BETA" radio 11
2.5 Coding "GAMMA" radio 11
2.6 Read measured value block 13
2.7 Display group overview 14
3 Self-diagnosis of Radio/Navigation system (RNS) with multi-function display (MFD) 18
3.1 Self-diagnosis of Radio/Navigation system (RNS) with multi-function display (MFD) 18
3.2 Self-diagnosis RNS with MFD 18
3.3 Self-diagnosis of radio part in RNS with MFD 19
3.4 Final control diagnosis 24
3.5 Coding radio functions 26
3.6 Read measured value block 27
3.7 Display group overview 28
3.8 Self-diagnosis of navigation part in RNS with MFD 32
3.9 Coding navigation system 37
3.10 Read measured value block 39
3.11 Display group overview 40
3.12 Table for tyre circumference 46
4 Radio/Navigation system self-diagnosis (RNS) 49
4.1 Radio/Navigation system self-diagnosis (RNS) 49
4.2 Self-diagnosis RNS 49
4.3 Self-diagnosis of radio part in RNS 50
4.4 Final control diagnosis 55
4.5 Coding radio functions 57
4.6 Read measured value block 58
4.7 Display group overview 59
4.8 Self-diagnosis of navigation part in RNS 63
4.9 Coding navigation system 69
4.10 Read measured value block 70
4.11 Display group overview 71
4.12 Adaption 76

91 - Radio, telephone, navigation 80
1 Radio systems 80
1.1 Radio systems 80
1.2 Radio systems > 09.99 80
1.3 Radio system "alpha" > 09.99 80
1.4 Radio system "beta" > 09.99 81
1.5 Removing and installing radio > 09.99 82
1.6 Activating radio anti-theft coding > 09.99 83
1.7 Radio systems 10.99 > 83
1.8 Radio system "ALPHA" 10.99 > 84
1.9 Radio system "BETA" 10.99 > 85
1.10 Radio system "GAMMA" 10.99 > 87
1.11 Removing and installing radio 10.99 > 89
1.12 Removing and installing CD player 10.99 > 90

Copyright by Volkswagen AG. Volkswagen AG does not guarantee or accept any liability with respect to the correctness of information in this document. Copying or distribution is not permitted without authorisation from Volkswagen AG. Protected by copyright.
satelettronica

1.13 Removing and installing CD changer 10.99 > 92
1.14 Electronic anti-theft system for "alpha" radio 10.99 > 92
1.15 Electronic anti-theft system for "BETA" and "GAMMA" radios 10.99 > 93

2 Aerial systems 97
2.1 Aerial systems 97
2.2 Roof aerial for radio operation -R11-, vehicles > 09.99 98
2.3 Roof aerial for radio operation -R11-, vehicles 10.99 > 99
2.4 Roof aerial for radio, telephone and navigation system -R52- vehicles 10.99 > 100

3 Loudspeaker system 102
3.1 Loudspeaker system 102
3.2 Removing and installing loudspeaker, vehicles >09.99 102
3.3 Removing and installing loudspeaker, vehicles 10.99 > 103

4 Radio/Navigations System (RNS) with multi-function display (MFD) 105
4.1 Radio/Navigations System (RNS) with multi-function display (MFD) 105
4.2 General description 106
4.3 Electronic anti-theft system 106
4.4 Connections on radio navigation system 108
4.5 Removing and installing radio/navigation system 111

5 Radio navigation system (RNS) 113
5.1 Radio navigation system (RNS) 113
5.2 General description 113
5.3 Electronic anti-theft system 114
5.4 Connections on radio navigation system 118
5.5 Removing and installing radio/navigation system 122

6 Notes for mobile telephone and two-way radio operation 124
6.1 Notes for mobile telephone and two-way radio operation 124
6.2 General notes 124
6.3 Notes on performing repair work 124
6.4 Overview of battery, transmitter/receiver unit, fuse and wiring harness 126
6.5 Transmitted output and aerial fitting locations 128

7 Suppression measures 129
7.1 Suppression measures 129

Protected by copyright. Copying for private or commercial purposes, in part or in whole, is not permitted unless authorised by Volkswagen AG. Volkswagen AG does not guarantee or accept any liability with respect to the correctness of information in this document. Copyright by Volkswagen AG.
satelettronica

01 - Self-diagnosis

1 - Self-diagnosis

1.1 - Self-diagnosis

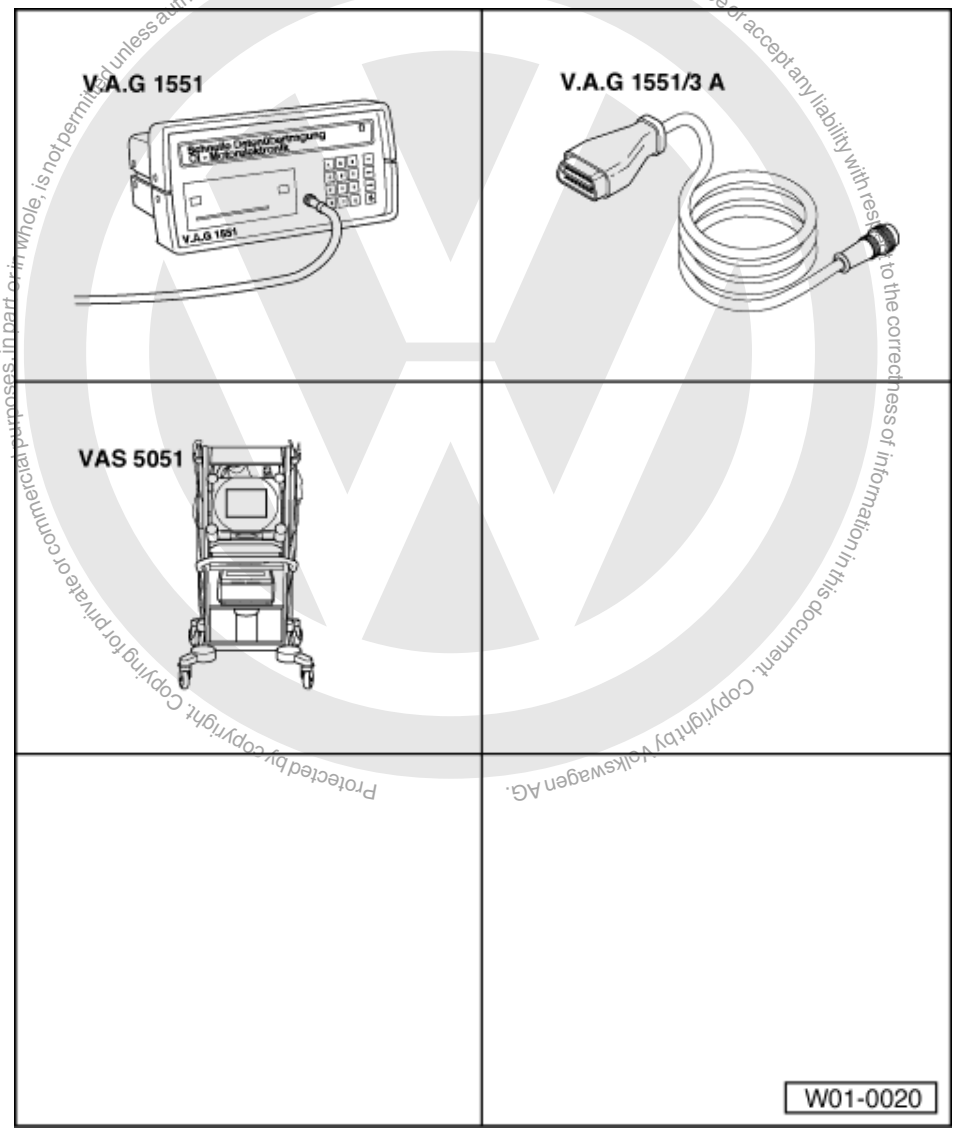

1.2 - Tools

Special tools, workshop equipment, test and measuring appliances and auxiliary items required

- V.A.G 1551 Fault reader
- V.A.G 1551/3 or 1551/3 A Adapter cable
- VAS 5051 Vehicle diagnosis, Testing and Information System

Protected by copyright. Copying for private or commercial purposes, in part or in whole, is not permitted unless authorised by Volkswagen AG. Volkswagen AG does not guarantee or accept any liability with respect to the correctness of information in this document. Copyright by Volkswagen AG.
satelettronica

1.3 - Connecting fault reader

Measures for rectifying commonly occurring faults on particular models

=> Technical Service Handbook

If faults occur in the sensors and components being monitored, they will be stored in the fault memory together with an indication of the type of fault.

A maximum of 4 faults can be stored simultaneously.

Sporadic faults are automatically cancelled if they are not repeated in next 50 engine starts.

The self diagnosis must be initiated at the commencement of fault finding and the stored information interrogated with the

Vehicle Diagnosis, Testing and Information system VAS 5051 or

Fault reader V.A.G 1551 or

Vehicle system tester V.A.G 1552.

The fault information displayed is used in conjunction with a fault table which has information on the possible fault causes for pin-pointed repair measures.

All functions which could previously be performed with V.A.G 1551/1552 can also be performed with the new tester VAS 5051 in the operating mode vehicle self-diagnosis.

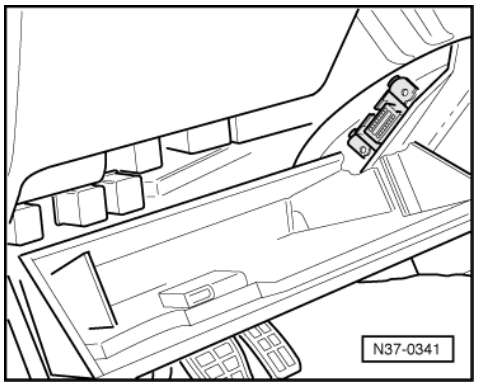

=> Operating instructions for Vehicle Diagnosis, Testing and Information System VAS 5051.

Connecting VAS 5051

For vehicles up to ▸08.97

The self-diagnosis connection is located behind the shelf on the driver's side.

- Open and unhook shelf on driver's side.
- Fit connector from diagnosis cable VAS 5051/1 or VAS 5051/3 to diagnosis connection.

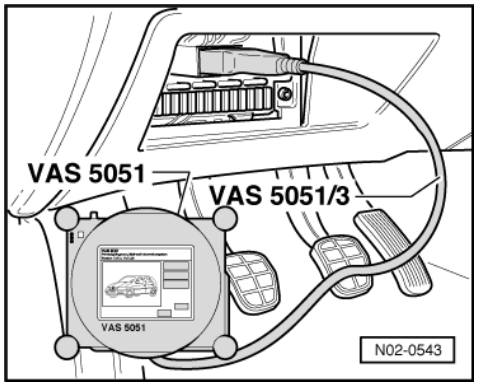

Protected by copyright. Copying for private or commercial purposes, in part or in whole, is not permitted unless authorised by Volkswagen AG. Volkswagen AG does not guarantee or accept any liability with respect to the correctness of information in this document. Copyright by Volkswagen AG.
satelettronica

For vehicles 09.97 ▸

The self-diagnosis connection is located on the fuse strip in front left footwell

- Remove cover in front of fuse strip
- Fit connector from diagnosis cable VAS 5051/1 or VAS 5051/3 to diagnosis connection.

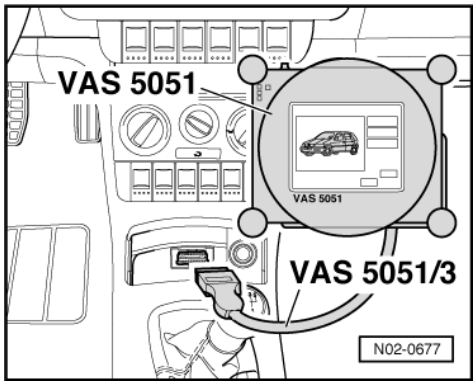

For vehicles 10.99 ▸

- Remove ashtray insert -1-.
- Fit connector from diagnosis cable VAS 5051/1 or VAS 5051/3 to diagnosis connection.
- Switch on ignition.

Selecting operating mode:

- Press button on display for "Vehicle self-diagnosis".

Selecting vehicle system:

- Press button on display for vehicle system to be tested.

The control unit identification and coding are indicated on the display.

Selecting diagnosis function:

All diagnostic functions available are indicated on the display.

- Press button on display for desired function.

Notes:

- The display zones in functions 04 - basic setting or 08 - read measured value block are displayed from top to bottom.
- The following test sequences are described for fault reader V.A.G 1551.

Connecting V.A.G 1551

Check prerequisites:

- All fuses according to current flow diagram OK.
- The battery voltage must be at least 9.5 V.

Work sequence

- Connect fault reader V.A.G 1551 with cable V.A.G 1551/3.

Notes:

- If the display remains blank, check V.A.G 1551 voltage supply according to current flow diagram.

satelettronica
Protected by copyright. Copying for private or commercial purposes, in part or in whole, is not permitted unless authorised by Volkswagen AG. Volkswagen AG does not guarantee or accept any liability with respect to the correctness of information in this document. Copyright by Volkswagen AG.

=> Current flow diagrams, Electrical fault finding and Fitting locations binder

- Additional operating information can be printed out depending on the programme by pressing the HELP key of V.A.G 1551.

- In the operating mode 1 "Rapid data transfer" the function 00 "Automatic test sequence" can be carried out. Then all vehicle control units will be interrogated automatically.
- The ⇒key is used for advancing the programme sequence.
- The PRINT key is used for switching on the printer (warning lamp in key lights up).

- Switch on ignition.

-> Indicated on display:

```
V.A.G - SELF DIAGNOSIS     HELP
     1 - Rapid data transfer*
     2 - Flash code output*
```

* Appears alternately

- Operate fault reader taking into account the information on the display:
- Press key 1 for "Rapid data transfer".
- Continue self-diagnosis for vehicle system to be tested as described in "Performing self-diagnosis" => Contents

2 - Self-diagnosis for radio generation 10.99 >

2.1 - Self-diagnosis for radio generation 10.99 >

At present only the "BETA" and "GAMMA" units of radio generation 10.99‣ are equipped with self-diagnosis for V.A.G 1551.

The self diagnosis must be initiated at the commencement of fault finding and the stored information interrogated with the

Vehicle Diagnosis, Testing and Information system VAS 5051 or

Fault reader V.A.G 1551 or

Vehicle system tester V.A.G 1552.

2.2 - Performing self-diagnosis

- Connect fault reader => page 1 .

Notes:

- The following test sequences are described for fault reader V.A.G 1551.
- Additional operating instructions can be called up with the fault reader HELP key.
- The ⇒ key serves to advance the programme sequence.
- In the operating mode 1 "Rapid data transfer" the function 00 "Automatic test sequence" can be carried out. Then all vehicle control units will be interrogated automatically.

- Switch on ignition.
- Switch on printer with the Print key (indicator lamp in key lights up).

-> Indicated on display:

```
Rapid data transfer     HELP
Input address word XX
```

Protected by copyright. Copying for private or commercial purposes, in part or in whole, is not permitted unless authorised by Volkswagen AG. Volkswagen AG does not guarantee or accept any liability with respect to the correctness of information in this document. Copyright by Volkswagen AG.
satelettronica

- Press keys 5 and 6. "56" enters the address word "Radio".

-> Indicated on display:

```
Rapid data transfer      Q
56 Radio
```

- Confirm entry with Q key.

-> Indicated on display:

```
Rapid data transfer      Q
Tester sends address word 56
```

Interrogate radio version

-> Indicated on display:

```
1J0035152     Radio     0001
Coding     01401     WSC     00000
```

- Upper line Unit version number of radio part
  Software version number
- Lower line Code number Dealership number1)

1)- Will be automatically stored in the radio unit when entering the system.

Indicated on display of radio during self-diagnosis: "DIAG".

- Press ⇒ key.

-> Indicated on display:

```
Rapid data transfer     HELP
Select function XX
```

-> Will be indicated on display:

```
Control unit does not answer!     HELP
```

- By pressing the "HELP" key a list of possible fault causes is printed out.
- After rectifying faults, enter address word 56 for radio again and confirm with Q.

-> Indicated on display:

```
1J0035152     Radio     0001
Coding     01401     WSC     00000
```

- Press ⇒ key.

-> Indicated on display:

```
Rapid data transfer     HELP
Select function XX
```

- After the HELP key is pressed, a list of the possible functions is printed out.

List of selectable functions

01 -	Interrogate radio version	5
02 -	Interrogate fault memory	6
03 -	Final control diagnosis	9
05 -	Erase fault memory	7
06 -	End output	7
07 -	Code radio functions	11

Protected by copyright. Copyright by Volkswagen AG. Volkswagen AG does not guarantee or accept any liability with respect to the correctness of information in this document. Copying or distribution to third parties is not permitted unless authorised by Volkswagen AG.
satelettronica

08 -	Read measured value block	13

Notes:

- Do not select further functions, which can be printed out after pressing the HELP key.
- After the function is completed the V.A.G 1551 returns to the following start position:

-> Indicated on display:

```
Rapid data transfer      HELP
Select function XX
```

Interrogating fault memory

Note:

The displayed fault information is not constantly up-dated, but only when initiating the self-diagnosis or with the function 05 "Erase fault memory".

- Switch on printer with the Print key (indicator lamp in key lights up).

-> Indicated on display:

```
Rapid data transfer      HELP
Select function XX
```

- Press keys 0 and 2. (The function "Interrogate fault memory" is selected with 02.)

-> Indicated on display:

```
Rapid data transfer      Q
02 - Interrogate fault memory
```

- Confirm entry with key Q.

-> The number of stored faults appears in the display.

```
X faults recognized!
```

The stored faults are displayed and printed out one after another.

- Enter fault table at fault printed out and rectify fault => Page 8 .

-> If "No fault recognised" is displayed the programme will return to the start point after pressing ⇒ key.

```
No fault recognized!
```

-> Indicated on display:

```
Rapid data transfer      HELP
Select function XX
```

If something else is displayed:

=> Fault reader operating instructions

- End output (function 06) => Page 7 .
- Switch off ignition and separate diagnostic connections.

Protected by copyright. Copying for private or commercial purposes, in part or in whole, is not permitted unless authorised by Volkswagen AG. Volkswagen AG does not guarantee or accept any liability with respect to the correctness of information in this document. Copyright by Volkswagen AG.
satelettronica

Erasing fault memory

Note:

After erasing the fault memory its contents will automatically be indicated. If the fault memory cannot be erased, again interrogate fault memory and repair faults.

Prerequisites

- Fault memory interrogated =>Page 6 .
- All faults repaired.

After fault memory has been successfully interrogated:

-> Indicated on display:

```
Rapid data transfer      HELP
Select function XX
```

- Press keys 0 and 5. (05 selects the "Erase fault memory" function.)

-> Indicated on display:

```
Rapid data transfer      Q
05 Erase fault memory
```

- Confirm entry with key Q.

-> Indicated on display:

```
Rapid data transfer
Fault memory is erased!
```

The fault memory is now erased.

- Press ⇒ key.

-> Indicated on display:

```
Rapid data transfer      HELP
Select function XX
```

Notes:

- ◆

```
Warning!
Fault memory was not interrogated
```

-> If this appears in the display, the test sequence is faulty.

- ◆

```
Rapid data transfer
Fault memory was not interrogated
```

-> If this appears in the display, the test sequence is faulty.

Adhere exactly to test sequence: First interrogate fault memory, if necessary repair faults, then erase.

Ending output

- Press keys 0 and 6. (The function "End output" is selected with 06.)

-> Indicated on display:

```
Rapid data transfer      Q
06 End output
```

- Confirm entry with key Q.

-> Indicated on display:

Protected by copyright. Copyright by Volkswagen AG. Volkswagen AG does not guarantee or accept any liability with respect to the correctness of information in this document. Copyright by Volkswagen AG. Reproduction, in part or in whole, is not permitted unless authorised by Volkswagen AG for commercial purposes.
satelettronica

```
Rapid data transfer     Help
Enter address word XX
```

- Switch off ignition.
- Disconnect fault reader V.A.G 1551.

Fault table

Notes:

- The following table lists all the faults, with the corresponding 5 digit code numbers, that can be recognized by the radio self-diagnosis and printed out by the V.A.G 1551.
- Fault codes appear only on print-out.
- Before replacing components, check the wiring and connections to these components as well as the earth connections, according to current flow diagram.
- When repair has been carried out, the fault memory must always be interrogated again with the fault reader V.A.G 1551 and erased.

V.A.G. 1551 print out	Possible fault cause	Possible effects	Fault elimination
00668 Vehicle voltage terminal 30 Signal too weak* * This fault can also be stored if the starter was operated for more than 10 seconds.	Battery voltage below 9.5 Volt Battery insufficiently charged Battery defective Alternator defective	Radio unit does not function or function is poor	- Read measured value block => page 13 Check battery, charge if necessary => Electrical system, Repair group 27 Check alternator => Current flow diagrams, Electrical fault finding and Fitting locations binder

V.A.G. 1551 print out	Possible fault cause	Possible effects	Fault elimination
00849 S contact on ignition/starter switch - D Open circuit	Ignition/starter switch not OK. Wiring not OK. Radio not OK.	Radio does not automatically switch on when ignition is switched on, even though radio was switched on when ignition was last switched off. With radio switched on and ignition switched on, radio switches off automatically after 1 hour.	- Read measured value block =>page 13 Check wiring using current flow diagram Check ignition/starter switch, renew if necessary

V.A.G. 1551 print out	Possible fault cause	Possible effects	Fault elimination
00852 Front loudspeaker Short circuit Open circuit	Front speaker wiring short to wiring or short to earth Front bass speaker wiring opening circuit	One front loudspeaker not functioning One front bass loudspeaker not functioning	- Perform final control diagnosis => page 13 Check wiring using current flow diagram Renew defective loudspeaker
00853			

satelettronica

Protected by copyright. Copying for private or commercial purposes, in part or in whole, is not permitted unless authorised by Volkswagen AG. Volkswagen AG does not guarantee or assume any liability with respect to the correctness of information in this document. Copyright by Volkswagen AG.

V.A.G. 1551 print out	Possible fault cause	Possible effects	Fault elimination
Rear loudspeaker Short circuit Open circuit	Rear speaker wiring short to wiring or short to earth Rear speaker wiring open circuit	One rear loudspeaker not functioning One rear loudspeaker not functioning	- Perform final control diagnosis => page 13 Check wiring using current flow diagram Renew defective loudspeaker

V.A.G. 1551 print out	Possible fault cause	Possible effects	Fault elimination
00855 Connection to CD changer or CD player No communication	Wiring to CD changer or CD player defective CD changer or CD player defective Radio defective	CD changer or CD player function not OK.	- Read measured value block => page 13 Check wiring using current flow diagram Renew CD changer or CD player Renew radio
00856 Aerial (radio) Short circuit Open circuit	Aerial cable defective Aerial cable not connected Aerial defective	No or poor radio reception	- Read measured value block => page 13 Check aerial cable Check wiring using current flow diagram Check aerial Renew aerial

V.A.G. 1551 print out	Possible fault cause	Possible effects	Fault elimination
01044 Control unit incorrectly coded	Radio functions not coded	Radio functions or sound not OK. Incorrect fault entry in fault memory	- This fault message cannot be erased. Coding radio functions => Page 11
65535 Control unit defective	Radio defective	Radio unit function not OK.	- Renew radio

During the fault diagnosis it is not possible to recognize if a fault exists after fault rectification.

Therefore after each fault rectification and erasure of the fault memory it is necessary to interrogate the fault memory again.

2.3 - Final control diagnosis

The final control diagnosis is part of the electrical check.

The fault memory must be interrogated after the final control diagnosis.

satelettronica

Initiating final control diagnosis

Note:

The -C- key can be used to exit the test sequence at any time.

- Connect fault reader V.A.G 1551, select operating mode 1 "Rapid data transfer", switch on ignition and enter address word 56 "Radio".

-> Indicated on display:

```
Rapid data transfer     HELP
Select function XX
```

- Press keys 0 and 3 (03 selects the "final control diagnosis" function).

-> Indicated on display

```
Rapid data transfer     Q
03 - Final control diagnosis
```

- Confirm entry with key Q.

-> Indicated on display:

```
Rapid data transfer
Loudspeaker
```

The loudspeakers are tested with a test current.

If a loudspeaker circuit is recognized by the system as defective then a fault message is stored in the fault memory.

- Interrogate fault memory
- Service wiring or loudspeaker if necessary, erase fault memory and repeat final control diagnosis.

When final control diagnosis is OK:

- Press ⇒ key.

-> Indicated on display:

```
Final control diagnosis
Radio display dash panel insert output
```

Currently the Polo is not equipped with a dash panel insert display, therefore this display is not relevant.

- Press ⇒ key.

-> Indicated on display:

```
Final control diagnosis
END
```

- Press ⇒ key.

-> Indicated on display:

```
Rapid data transfer     HELP
Select function XX
```

- Press keys 0 and 6. (The function "End output" is selected with 06.)

-> Indicated on display:

```
Rapid data transfer     Q
06 End output
```

- Confirm entry with key Q.

Protected by copyright. Copying for private or commercial purposes, in part or in whole, is not permitted unless authorised by Volkswagen AG. Volkswagen AG does not guarantee or accept any liability with respect to the correctness of information in this document. Copyright by Volkswagen AG.
satelettronica

-> Indicated on display:

```
Rapid data transfer      Help
Enter address word XX
```

The tester is again in basic function.

2.4 - Coding "BETA" radio

The following radio functions can be coded:

- Radio unit "BETA" with and without removable control panel, code number -00001 -
- Radio "BETA" with and without removable control panel plus CD player, code number - 00003 -

If the radio unit cannot be coded as described above, perform coding.

- Press keys 0 and 7.
- Confirm entry with key Q.

```
Coding control unit
Enter code number XXXXX      (0-32000)
```

-> Indicated on display:

- Enter code number.

```
Coding control unit      Q
Enter code number 00001      (0-32000)
```

-> Indicated on display, e.g.:

- Confirm entry with key Q.

-> Indicated on display:

```
Rapid data transfer      HELP
Select function XX
```

Read fault memory after completing the coding =>Page 7 .

Ending function:

- Press keys 0 and 6. (The function "End output" is selected with 06.)

-> Indicated on display:

```
Rapid data transfer      Q
06 End output
```

- Confirm entry with key Q.

-> Indicated on display:

```
Rapid data transfer      Help
Enter address word XX
```

The tester is again in basic function.

2.5 - Coding "GAMMA" radio

The following radio functions can be coded:

- Sound adaption
- Number of loudspeakers
- Sound system

Protected by copyright. Copying for private or commercial purposes, in part or in whole, is not permitted unless authorised by Volkswagen AG. Volkswagen AG does not guarantee or accept any liability with respect to the correctness of information in this document. Copyright by Volkswagen AG.
satelettronica

- CD changer and/or CD player and type of aerial

Breakdown of code number:

06	Code number for sound synchronisation
4	Code number for number of loudspeakers
0	Code number for sound system
3	Code number for CD changer, CD player and type of aerial

Performing coding

- Press keys 0 and 7.
- Confirm entry with key Q.

```
Coding control unit
Enter code number XXXXX          (0-32000)
```

-> Indicated on display:

- Enter code number compiled from code table

Code table:

Code number

Setting for tuning sound

Code number for basic settings

Code No. for number of loudspeakers

Code number for sound system

Code number for configuring radio

1st+2nd	3rd	4th	5th	Position
06				Sound tuning for Polo
	2 4			2 passive loudspeakers, front 4 passive loudspeakers
		0		No sound system
			1 3	Radio with active aerial Radio with CD changer/CD player and active aerial

```
Coding control unit      Q
Enter code number 06403      (0-32000)
```

-> Indicated on display, e.g.:

- Confirm entry with key Q.

-> Indicated on display:

```
1J0035152     Radio     0001
Coding     06403     WSC     00000
```

- Press ⇒ key.

-> Indicated on display:

Reproduction of copyright. Copyright for photocopies in part or in whole is not permitted unless authorised by Volkswagen AG. Volkswagen AG does not guarantee or accept any liability with respect to the correctness of information in this document. Copyright by Volkswagen AG.

satelettronica

```
Rapid data transfer      HELP
Select function XX
```

Read fault memory after completing the coding =>Page 7 .

Ending function:

- Press keys 0 and 6. (The function "End output" is selected with 06.)

-> Indicated on display:

```
Rapid data transfer      Q
06 End output
```

- Confirm entry with key Q.

-> Indicated on display:

```
Rapid data transfer      Help
Enter address word XX
```

The tester is again in basic function.

2.6 - Read measured value block

The self-diagnosis continually monitors the input signals and voltages required to operate the radio system.

The measured value block is divided into 4 display group numbers. The assignment of the individual display zones can be taken from the display group overview =>Page 14 .

- Connect fault reader V.A.G 1551, select operating mode 1 "Rapid data transfer", switch on ignition and enter address word 56 "Radio".

After displaying the control unit identification:

- Press ⇒ key.

-> Indicated on display:

```
Rapid data transfer      HELP
Select function XX
```

- Press keys -0- and -8- (08 initiates the "Read measured value block" function).

-> Indicated on display:

```
Rapid data transfer      Q
08 - Read measured value block
```

- Confirm entry with the Q key.

-> Indicated on display:

```
Read measured value block      Help
Enter display group number XXX
```

The display group number 001 is an example, to illustrate the sequence.

- Press keys 0, 0 and 1 for "Display group number 1" and confirm entry with Q key.

-> Indicated on display:
(1...4 = Display zones)

```
Read measured value block      1
"
     1      2      3      4
```

Protected by copyright. Copyright by Volkswagen AG. Volkswagen AG does not guarantee or accept any liability with respect to the correctness of information in this document. Copyright by Volkswagen AG. Protected by copyright. Copying for private or commercial purposes, in part or in whole, is not permitted unless authorised by Volkswagen AG.
satelettronica

Note:

To change to another display group proceed as follows:

Display group	V.A.G 1551	V.A.G 1552
Higher	Press key 3	Press ↑key
Lower	Press key 1	Press ↓key
Skip	Press key C	Press key C

- Displayed after pressing C key.

-> Indicated on display:

```
Read measured value block     Help
Enter display group number XXX
```

- Now enter the display group number required.

Notes:

- The actual sender and sensor values are always shown on the display.
- Other display groups are possible but these are not required for fault finding!

2.7 - Display group overview

Break down of display content for display group number 001

Display group 001						
Read measured value block 1 ⇒				◂ Indicated on display		
xxx	xxx	xxx	xxx			
1	2	3	4	◂ Display zone	Specification	Evaluation
				S contact on or off (Radio does not switch off)	S contact on = Display "on". S contact off = Display "off".	=> Page 15
				Dimming of lights in %	Light off = "0%" Light on = "20 - 95%", according to position of lighting control for switches and instruments	
				Voltage supply in volts	approx. battery voltage	
				Road speed signal from speedometer	"1" or "0"	

Protected by copyright. Copying for private or commercial purposes, in part or in whole, is not permitted unless authorised by Volkswagen AG. Volkswagen AG does not guarantee or accept any liability with respect to the correctness of information in this document. Copyright by Volkswagen AG.
satelettronica

Evaluating display group number 001

Display zone	Description	Display	Rectifying fault
	Road speed signal from speedometer	"1" or "0" The display must always jump back and forth between "1" and "0" when a front wheel is being turned.	- Visually check wiring Check correct location and secure fit of connectors in relevant circuit and at the same time observe the display If the display content does not change during operation, the fault should be eliminated or the affected component renewed Erase fault memory Perform functional check Interrogate fault memory again
2	Voltage supply in volts	Approx. battery voltage	
3	Dimming of lights in %	Light off = display "0%" Light on = infinitely variable brightness control for switches and instruments with switches and instruments lighting control, display = "20 - 95%", according to position of control.	
4	S contact on or off (Radio does not switch off)	S contact on = display "on". S contact off = display "off".	

Break down of display content for display group number 002

Display group 002						
Read measured value block 2			⇒	◂ Indicated on display		
xxx	xxx	xxx	xxx			
1	2	3	4	◂ Display zones	Specification	Evaluation
				OK, short or open circuit	"OK"	=> Page 15
				Loudspeakers rear	"Lsp. rear"	
				OK, short or open circuit	"OK"	
				Loudspeakers front	"Lsp. front"	

Evaluating display group number 002

Display zone	Description	Display	Rectifying fault
1	Loudspeakers front	Lsp. front	- Visually check wiring Check correct location and secure fit of connectors in relevant circuit and at the same time observe the display If the display content does not change during operation, the fault should be eliminated or the affected component renewed Perform functional check Interrogate fault memory again

Protected by copyright. Copying for private or commercial purposes, in part or in whole, is not permitted unless authorised by Volkswagen AG. Volkswagen AG does not guarantee or accept any liability with respect to the correctness of information in this document. Copyright by Volkswagen AG.
satelettronica

Display zone	Description	Display	Rectifying fault
2	OK, short or open circuit	OK, short circ., open circ.	
3	Loudspeakers rear	Lsp. rear	
4	OK, short or open circuit	OK, short circ., open circ.	

Break down of display content for display group number 003

Display group 003						
Read measured value block 3			⇒	◂ Indicated on display		
xxx	xxx	xxx	xxx			
1	2	3	4	◂ Display zones	Specification	Evaluation
				Empty1)		=> Page 16
			OK, short or open circuit		"OK"	
		Aerial			"Aerial"	
	Passive or active				"Active"	

1) Empty means in this case: Display zone is blank

Evaluating display group number 003

Display zone	Description	Display	Rectifying fault
1	Passive operating aerial or active aerial with integrated amplifier	"Passive" or "active" aerial	- Visually check wiring Check correct location and secure fit of connectors in relevant circuit and at the same time observe the display If the display content does not change during operation, the fault should be eliminated or the affected component renewed Perform functional check Interrogate fault memory again
2	Aerial	"Aerial"	
3	OK, short or open circuit	OK, short circ., open circ.	
4	None	Empty1)	

1) Empty means in this case: Display zone is blank

Break down of display content for display group number 004

Display group 004						
Read measured value block 4			⇒	◂ Indicated on display		
xxx	xxx	xxx	xxx			
1	2	3	4	◂ Display zones	Specification	Evaluation
				Status telephone mute	"on" or "off"	
			Telephone		"Telephone"	=> Page 17
		Empty1)				

satelettronica
Protected by copyright. Copying for private or commercial purposes, in part or in whole, is not permitted unless authorised by Volkswagen AG. Volkswagen AG does not guarantee or accept any liability with respect to the correctness of information in this document. Copyright by Volkswagen AG.

Status control output of active amplifier (DSP)	"0"	

1) Empty means in this case: Display zone is blank

Evaluating display group number 004

Display zone	Description	Display	Rectifying fault
1	Status control output of active amplifier (DSP)	If control output OK = display "0" If control output not OK = display "1"	- Visually check wiring Check correct location and secure fit of connectors in relevant circuit and at the same time observe the display If the display content does not change during operation, the fault should be eliminated or the affected component renewed Perform functional check Interrogate fault memory again
2	None	Empty1)	
3	Telephone	"Telephone"	
4	Status telephone mute mode (pin 2 of multi-pin connector III)	If output active = display "on". If output inactive = display "off".	

1) Empty means in this case: Display zone is blank

Break down of display content for display group number 005

Display group 005						
Read measured value block 5			⇒	◂ Indicated on display		
xxx	xxx	xxx	xxx			
1	2	3	4	◂ Display zones	Specification	Evaluation
				Empty1)		=> Page 17
			Empty1)			
		OK or not OK			"OK"	
	Communication to CD changer/CD player				"CD connect"	

1) Empty means in this case: Display zone is blank

Evaluating display group number 005

Display zone	Description	Display	Rectifying fault
1	Communication to CD-changer/CD player (even if no CD-changer is coded)	"CD connect"	- Visually check wiring Check correct location and secure fit of connectors in relevant circuit and at the same time observe the display

Protected by copyright. Copyright by Volkswagen AG. Commercial purposes in part or in whole not permitted unless authorised by Volkswagen AG. Volkswagen AG does not guarantee or accept any liability with respect to the correctness of information in this document.
satelettronica

Display zone	Description	Display	Rectifying fault
2	Communication to CD changer OK or not OK.	"OK" if a CD changer is connected. "not OK" if a CD changer is connected, the display "not OK" is incorrect => Rectifying fault. "not OK" if no CD changer is connected, the display "not OK" is correct.	- If the display content does not change during operation, the fault should be eliminated or the affected component renewed Perform functional check Interrogate fault memory again
3	None	Empty1)	
4	None	Empty1)	

1) Empty means in this case: Display zone is blank

If the displayed values in all display zones are OK:

- Press ⇒key.

Note:

After completing the function "Read measured value block" interrogate fault memory => Page 6 .

Ending output

- Press keys 0 and 6. (The function "End output" is selected with 06.)

-> Indicated on display:

```
Rapid data transfer      Q
06 End output
```

- Confirm entry with key Q.

-> Indicated on display:

```
Rapid data transfer      Help
Enter address word XX
```

- Switch off ignition.
- Disconnect fault reader V.A.G 1551.

3 - Self-diagnosis of Radio/Navigation system (RNS) with multi-function display (MFD)

3.1 - Self-diagnosis of Radio/Navigation system (RNS) with multi-function display (MFD)

3.2 - Self-diagnosis RNS with MFD

The radio/navigation system (RNS) combines the functions of a navigation system with that of a high quality RDS car radio.

Protected by copyright. Copying for private or commercial purposes, part or in whole, is not permitted unless authorised by Volkswagen AG. Volkswagen AG does not guarantee or accept any liability with respect to the correctness of information in this document. Copyright by Volkswagen AG.
satelettronica

Installed in the systems double DIN housing are

- a RDS radio receiver
- a 5-inch liquid crystal colour display
- a navigation system with GPS satellite receiver
- a CD-ROM drive for the navigation system.

The self diagnosis must be initiated at the commencement of fault finding and the stored information interrogated with the

Vehicle Diagnosis, Testing and Information system VAS 5051 or

Fault reader V.A.G 1551 or

Vehicle system tester V.A.G 1552.

Note:

The following description deals only with the fault reader V.A.G 1551.

The radio part and the navigation system have different address words for the self-diagnosis.

Performing self-diagnosis of radio part
=> Self-diagnosis of radio systems from Page 19

Performing self-diagnosis of navigation system => self-diagnosis of navigation system from page 32

3.3 - Self-diagnosis of radio part in RNS with MFD

Check prerequisites:

- All fuses according to current flow diagram OK.
- Supply voltage OK. (at least 9.5 V).
- Fault reader V.A.G 1551 or V.A.G 1552 connected.

Connecting fault reader => page 1 .

- Switch on ignition.
- Switch on printer with the Print key (indicator lamp in key lights up).
- Press key 1 for "Rapid data transfer" mode.

-> Indicated on display:

```
Rapid data transfer     HELP
Input address word XX
```

- Press keys 5 and 6. "56" enters the address word "Radio".

-> Indicated on display:

```
Rapid data transfer      Q
56 Radio
```

- Confirm entry with Q key.

-> Indicated on display:

```
Rapid data transfer      Q
Tester sends address word 56
```

satelettronica

Interrogate radio version

-> Indicated on display:

```
3B0035196 C     Radio     0001
Coding     01407     WSC     00000
```

- Upper line Unit version number of radio part in RNS housing (Radio) System designation Software version number
- Lower line Code number Dealership number1)

1)- Will be automatically stored in the radio unit when entering the system.

Indicated on display of radio/navigation system during self-diagnosis: "DIAG".

Notes:

- Radio part and navigation part of the Radio/Navigation system have different unit version numbers.
- The displayed unit version number is not the part number for the complete Radio/Navigation system.
- The part number for the complete Radio/Navigation system is printed on a sticker on the radio/navigation system housing!

- Press ⇒ key.

-> Indicated on display:

```
Rapid data transfer     HELP
Select function XX
```

-> Will be indicated on display:

```
Control unit does not answer!     HELP
```

- By pressing the "HELP" key a list of possible fault causes is printed out.
- After rectifying faults, enter address word 56 for radio again and confirm with Q.

-> Indicated on display:

```
3B0035196 C     Radio     0001
Coding     01407     WSC     00000
```

- Press ⇒ key.

-> Indicated on display:

```
Rapid data transfer     HELP
Select function XX
```

- After the HELP key is pressed, a list of the possible functions is printed out.

List of selectable functions

01 -	Interrogate radio unit version	20
02 -	Interrogate fault memory	21
03 -	Final control diagnosis	24
05 -	Erase fault memory	21
06 -	End output	22
07 -	Code radio functions	26
08 -	Read measured value block	27

Notes:

- Do not select further functions, which can be printed out after pressing the HELP key.

Protected by copyright. Copying for private or commercial purposes, in part or in whole, is not permitted unless authorised by Volkswagen AG. Volkswagen AG does not guarantee or accept any liability with respect to the correctness of information in this document. Copyright by Volkswagen AG.
satelettronica

- After the function is completed the V.A.G 1551 returns to the following start position:

-> Indicated on display:

```
Rapid data transfer      HELP
Select function XX
```

Interrogating fault memory

Note:

The displayed fault information is not constantly up-dated, but only when initiating the self-diagnosis or with the function 05 "Erase fault memory".

- Switch on printer with the Print key (indicator lamp in key lights up).

-> Indicated on display:

```
Rapid data transfer      HELP
Select function XX
```

- Press keys 0 and 2. (The function "Interrogate fault memory" is selected with 02.)

-> Indicated on display:

```
Rapid data transfer      Q
02 - Interrogate fault memory
```

- Confirm entry with key Q.

-> The number of stored faults appears in the display.

```
X faults recognized!
```

The stored faults are displayed and printed out one after another.

- Enter fault table at fault printed out and rectify fault => Page 23 .

-> If "No fault recognised" is displayed the programme will return to the start point after pressing ⇒ key.

```
No fault recognized!
```

-> Indicated on display:

```
Rapid data transfer      HELP
Select function XX
```

If something else is displayed:

=> Fault reader operating instructions

- End output (function 06) => Page 22 .
- Switch off ignition and separate diagnostic connections.

Erasing fault memory

Note:

After erasing the fault memory its contents will automatically be indicated. If the fault memory cannot be erased, interrogate fault memory again and rectify faults.

Prerequisites

- Fault memory interrogated =>Page 21 .

Protected by copyright. Copying for private or commercial purposes, in part or in whole, is not permitted unless authorised by Volkswagen AG. Volkswagen AG does not guarantee or accept any liability with respect to the correctness of information in this document. Copyright by Volkswagen AG.
satelettronica

- All faults repaired.

After fault memory has been successfully interrogated:

-> Indicated on display:

```
Rapid data transfer      HELP
Select function XX
```

- Press keys 0 and 5. (05 selects the "Erase fault memory" function.)

-> Indicated on display:

```
Rapid data transfer      Q
05 Erase fault memory
```

- Confirm entry with key Q.

-> Indicated on display:

```
Rapid data transfer
Fault memory is erased!
```

The fault memory is now erased.

- Press ⇒ key.

-> Indicated on display:

```
Rapid data transfer      HELP
Select function XX
```

Notes:

```
Warning!
Fault memory was not interrogated
```

-> If this appears in the display, the test sequence is faulty.

```
Rapid data transfer
Fault memory was not interrogated
```

-> If this appears in the display, the test sequence is faulty.

Adhere exactly to test sequence: First interrogate fault memory, if necessary repair faults, then erase.

Ending output

- Press keys 0 and 6. (The function "End output" is selected with 06.)

-> Indicated on display:

```
Rapid data transfer      Q
06 End output
```

- Confirm entry with key Q.

-> Indicated on display:

```
Rapid data transfer      Help
Enter address word XX
```

- Switch off ignition.
- Disconnect fault reader V.A.G 1551.

Protected by copyright. Copying for private or commercial purposes, in part or in whole, is not permitted unless authorised by Volkswagen AG. Volkswagen AG does not guarantee or accept any liability with respect to the correctness of information in this document. Copyright by Volkswagen AG.
satelettronica

Fault table

Notes:

- The following table lists all the faults, with the corresponding 5 digit code numbers, that can be recognized by the radio/navigation system and printed out by the V.A.G 1551.
- Fault codes appear only on print-out.
- Before replacing components, check the wiring and connections to these components as well as the earth connections, according to current flow diagram.
- When repair has been carried out, the fault memory must always be interrogated again with the fault reader V.A.G 1551 and erased.

V.A.G. 1551 print out	Possible fault cause	Possible effects	Fault elimination
00668 Vehicle voltage terminal 30 Signal too weak* * This fault can also be stored if the starter was operated for more than 10 seconds.	Battery voltage below 9.5 Volt Battery insufficiently charged Battery defective Alternator defective	Radio part does not function or function is poor	- Read measured value block => page 27 Check battery, charge if necessary => Electrical system, Repair group 27 Check alternator => Current flow diagrams, Electrical fault finding and Fitting locations binder

V.A.G. 1551 print out	Possible fault cause	Possible effects	Fault elimination
00849 S contact on ignition/starter switch - D Open circuit	Ignition/starter switch not OK. Wiring not OK. Radio/Navigation system not OK.	Radio does not automatically switch on when ignition is switched on, even though radio was switched on when ignition was last switched off. With radio switched on and ignition switched on, radio switches off automatically after 1 hour.	- Read measured value block =>page 27 Check wiring using current flow diagram Check ignition/starter switch, renew if necessary

V.A.G. 1551 print out	Possible fault cause	Possible effects	Fault elimination
00852 Front loudspeaker Short circuit Open circuit	Front speaker wiring short to wiring or short to earth or short circuit in loudspeaker coil Front bass speaker wiring opening circuit or open circuit in loudspeaker coil	One front loudspeaker not functioning One front bass loudspeaker not functioning	- Perform final control diagnosis => page 27 Check wiring using current flow diagram Renew defective loudspeaker

V.A.G. 1551 print out	Possible fault cause	Possible effects	Fault elimination
00853			

satelettronica

V.A.G. 1551 print out	Possible fault cause	Possible effects	Fault elimination
Rear loudspeaker Short circuit Open circuit	Rear speaker wiring short to wiring or short to earth or short circuit in loudspeaker coil Rear speaker wiring opening circuit or open circuit in loudspeaker coil	One rear loudspeaker not functioning One rear loudspeaker not functioning	- Perform final control diagnosis => page 27 Wiring check using current flow diagram Renew defective loudspeaker

V.A.G. 1551 print out	Possible fault cause	Possible effects	Fault elimination
00855 Connection to CD changer No communication	Wiring to CD changer defective CD changer/CD player defective Radio defective	CD changer/CD player function not OK.	- Read measured value block => page 27 Check wiring using current flow diagram Renew CD changer/CD player Renew radio/navigation system

V.A.G. 1551 print out	Possible fault cause	Possible effects	Fault elimination
00856 Aerial (radio) Short circuit Open circuit	Aerial wire defective Aerial wire not connected Aerial defective	No or poor radio reception	- Read measured value block => page 27 Check aerial wire Check wiring using current flow diagram Check aerial
01044 Control unit incorrectly coded	Radio/navigation system not coded	Radio functions or sound not OK. Incorrect fault entry in fault memory	- This fault message cannot be erased. Coding radio/navigation system => Page 26
65535 Control unit defective	Radio/navigation system defective	Radio/navigation system function not OK.	- Renew radio/navigation system

During the fault diagnosis it is not possible to recognize if a fault exists after fault rectification.

Therefore after each fault rectification and erasure of the fault memory it is necessary to interrogate the fault memory again.

3.4 - Final control diagnosis

The final control diagnosis is part of the electrical check.

The fault memory must be interrogated after the final control diagnosis.

Protected by copyright. Copying for private or commercial purposes, in part or in whole, is not permitted unless authorised by Volkswagen AG. Volkswagen AG does not guarantee or accept any liability with respect to the correctness of information in this document. Copyright by Volkswagen AG.
satelettronica

Initiating final control diagnosis

Note:

The -C- key can be used to exit the test sequence at any time.

- Connect fault reader V.A.G 1551, select operating mode 1 "Rapid data transfer", switch on ignition and enter address word 56 "Radio".

-> Indicated on display:

```
Rapid data transfer     HELP
Select function XX
```

- Press keys 0 and 3 (03 selects the "final control diagnosis" function).

-> Indicated on display

```
Rapid data transfer     Q
03 - Final control diagnosis
```

- Confirm entry with key Q.

-> Indicated on display:

```
Rapid data transfer
Loudspeaker
```

The loudspeakers are tested with a test signal.

Note:

The test signal is audible or not audible, depending on the manufacturer of the radio/navigation system.

- Interrogate fault memory
- Service wiring or loudspeaker if necessary, erase fault memory and repeat final control diagnosis.

When final control diagnosis is OK:

- Press ⇒ key.

-> Indicated on display:

```
Final control diagnosis
Radio display dash panel insert output
```

Currently the Polo is not equipped with a dash panel insert display, therefore this display is not relevant.

- Press ⇒ key.

-> Indicated on display:

```
Final control diagnosis
END
```

- Press ⇒ key.

-> Indicated on display:

```
Rapid data transfer     HELP
Select function XX
```

- Press keys 0 and 6. (The function "End output" is selected with 06.)

-> Indicated on display:

```
Rapid data transfer     Q
06 End output
```

Protected by copyright. Copying for private or commercial purposes, in part or in whole, is not permitted unless authorised by Volkswagen AG. Volkswagen AG does not guarantee or accept any liability with respect to the correctness of information in this document. Copyright by Volkswagen AG.
satelettronica

- Confirm entry with key Q.

-> Indicated on display:

```
Rapid data transfer      Help
Enter address word XX
```

The tester is again in basic function.

3.5 - Coding radio functions

The following radio functions can be coded:

- Sound adaption
- Number of loudspeakers
- Sound system
- CD changer and type of aerial

Breakdown of code number:

06	Code number for sound synchronisation
4	Code number for number of loudspeakers
0	Code number for sound system
3	Code number for CD changer and type of aerial

Performing coding

- Press keys 0 and 7.
- Confirm entry with key Q.

```
Coding control unit
Enter code number XXXXX     (0-32000)
```

-> Indicated on display:

- Enter code number compiled from code table

Code table:

Code number

Setting for tuning sound

Code number for basic settings

Code No. for number of loudspeakers

Code number for sound system

Code number for configuring radio

1st+2nd	3rd	4th	5th	Position
06				Sound tuning for Polo
	2 4			2 passive loudspeakers, front 4 passive loudspeakers

Reproduction of this document or any part of its contents without the express authorisation of Volkswagen AG is not permitted. Volkswagen AG does not guarantee or accept any liability with respect to the correctness of information in this document. Copyright by Volkswagen AG.

satelettronica

		0 2		No sound system With sound system (DSP)
			1 3	Radio with active aerial Radio with CD changer/CD player and active aerial

```
Coding control unit     Q
Enter code number 06403     (0-32000)
```

-> Indicated on display, e.g.:

- Confirm entry with key Q.

-> Indicated on display:

```
3B0035196 C     Radio     0001
Coding     06403     WSC     00000
```

- Press ⇒ key.

-> Indicated on display:

```
Rapid data transfer     HELP
Select function XX
```

Read fault memory after completing the coding =>Page 21 .

Ending function:

- Press keys 0 and 6. (The function "End output" is selected with 06.)
- End coding with ⇒key.

-> Indicated on display:

```
Rapid data transfer     Q
06 End output
```

- Confirm entry with key Q.

-> Indicated on display:

```
Rapid data transfer     Help
Enter address word XX
```

The tester is again in basic function.

3.6 - Read measured value block

The self-diagnosis continually monitors the input signals and voltages required to operate the radio/navigation system.

The measured value block is divided into 4 display group numbers. The assignment of the individual display zones can be taken from the display group overview =>Page 14 .

- Connect fault reader V.A.G 1551, select operating mode 1 "Rapid data transfer", switch on ignition and enter address word 56 "Radio".

After displaying the control unit identification:

- Press ⇒ key.

-> Indicated on display:

```
Rapid data transfer     HELP
Select function XX
```

Protected by copyright. Copying for private or commercial purposes, in part or in whole, is not permitted unless authorised by Volkswagen AG. Volkswagen AG does not guarantee or accept any liability with respect to the correctness of information in this document. Copyright by Volkswagen AG.
satelettronica

- Press keys -0- and -8- (08 initiates the "Read measured value block" function).

-> Indicated on display:

```
Rapid data transfer      Q
08 - Read measured value block
```

- Confirm entry with the Q key.

-> Indicated on display:

```
Read measured value block      Help
Enter display group number XXX
```

The display group number 001 is an example, to illustrate the sequence.

- Press keys 0, 0 and 1 for "Display group number 1" and confirm entry with Q key.

-> Indicated on display:
(1...4 = Display zones)

```
Read measured value block      1
"
     1      2      3      4
```

Note:

To change to another display group proceed as follows:

Display group	V.A.G 1551	V.A.G 1552
Higher	Press key 3	Press ↑key
Lower	Press key 1	Press ↓key
Skip	Press key C	Press key C

- Displayed after pressing C key.

-> Indicated on display:

```
Read measured value block      Help
Enter display group number XXX
```

- Now enter the display group number required.

Notes:

- The actual sender and sensor values are always shown on the display.
- Other display groups are possible but these are not required for fault finding!

Protected by copyright. Copying for private or commercial purposes, in part or whole, is not permitted unless authorised by Volkswagen AG. Volkswagen AG does not guarantee or accept any liability with respect to the correctness of information in this document. Copyright by Volkswagen AG.

3.7 - Display group overview

Break down of display content for display group number 001

Display group 001						
Read measured value block 1 ⇒				◂ Indicated on display		
xxx	xxx	xxx	xxx			
1	2	3	4	◂ Display zone	Specification	Evaluation
				S contact on or off (Radio does not switch off)	S contact on = Display "on". S contact off = Display "off".	=> page 29

satelettronica

		Dimming of lights in %	Light off = "0%" Light on = "20 - 95%", according to position of lighting control for switches and instruments	
	Voltage supply in volts		approx. battery voltage	
Road speed signal from speedometer			"1" or "0"	

Evaluating display group number 001

Display zone	Description	Display	Rectifying fault
	Road speed signal from speedometer	"1" or "0" The display must always jump back and forth between "1" and "0" when a front wheel is being turned.	- Visually check wiring Check correct location and secure fit of connectors in relevant circuit and at the same time observe the display If the display content does not change during operation, the fault should be eliminated or the affected component renewed Erase fault memory Perform functional check Interrogate fault memory again
2	Voltage supply in volts	Approx. battery voltage	
3	Dimming of lights in %	Light off = display "0%" Light on = infinitely variable brightness control for switches and instruments with switches and instruments lighting control, display = "20 - 95%", according to position of control.	
4	S contact on or off (Radio does not switch off)	S contact on = display "on". S contact off = display "off".	

Break down of display content for display group number 002

Display group 002						
Read measured value block 2			⇒	◂ Indicated on display		
xxx	xxx	xxx	xxx			
1	2	3	4	◂ Display zones	Specification	Evaluation
				OK, short or open circuit	"OK"	=> page 30
			Loudspeakers rear		"Lsp. rear"	
		OK, short or open circuit			"OK"	
	Loudspeakers front				"Lsp. front"	

Protected by copyright. Copying for private or commercial purposes, in part or in whole, is not permitted unless authorised by Volkswagen AG. Volkswagen AG does not guarantee or accept any liability with respect to the correctness of information in this document. Copyright by Volkswagen AG.

satelettronica

Evaluating display group number 002

Display zone	Description	Display	Rectifying fault
1	Loudspeakers front	Lsp. front	- Visually check wiring Check correct location and secure fit of connectors in relevant circuit and at the same time observe the display If the display content does not change during operation, the fault should be eliminated or the affected component renewed Perform functional check Interrogate fault memory again
2	OK, short or open circuit	OK, short circ., open circ.	
3	Loudspeakers rear	Lsp. rear	
4	OK, short or open circuit	OK, short circ., open circ.	

Break down of display content for display group number 003

Display group 003						
Read measured value block 3			⇒	◂ Indicated on display		
xxx	xxx	xxx	xxx			
1	2	3	4	◂ Display zones	Specification	Evaluation
				Empty1)		
			OK, short or open circuit		"OK"	=> page 30
		Aerial			"Aerial"	
	Passive or active				"Active"	

1) Empty means in this case: Display zone is blank

Evaluating display group number 003

Display zone	Description	Display	Rectifying fault
1	Passive operating aerial or active aerial with integrated amplifier	"Passive" or "active" aerial	- Visually check wiring Check correct location and secure fit of connectors in relevant circuit and at the same time observe the display If the display content does not change during operation, the fault should be eliminated or the affected component renewed Perform functional check Interrogate fault memory again
2	Aerial	"Aerial"	
3	OK, short or open circuit	OK, short circ., open circ.	
4	None	Empty1)	

1) Empty means in this case: Display zone is blank

Protected by copyright. Copying for private or commercial purposes, in part or in whole, is not permitted unless authorised by Volkswagen AG. Volkswagen AG does not guarantee or accept any liability with respect to the correctness of information in this document. Copyright by Volkswagen AG.
satelettronica

Protected by copyright. Copying for private or commercial purposes, in part or in whole, is not permitted unless authorised by Volkswagen AG. Volkswagen AG does not guarantee or accept any liability with respect to the correctness of information.

Break down of display content for display group number 004

Display group 004						
Read measured value block 4			⇒	◂ Indicated on display		
xxx	xxx	xxx	xxx			
1	2	3	4	◂ Display zones	Specification	Evaluation
				Status telephone mute	"on" or "off"	=> page 31
			Telephone		"Telephone"	
		Empty1)				
	Status control output of active amplifier (DSP)				"0"	

1) Empty means in this case: Display zone is blank

Evaluating display group number 004

Display zone	Description	Display	Rectifying fault
1	Status control output of active amplifier (DSP)	If control output OK = display "0" If control output not OK = display "1"	- Visually check wiring Check correct location and secure fit of connectors in relevant circuit and at the same time observe the display If the display content does not change during operation, the fault should be eliminated or the affected component renewed Perform functional check Interrogate fault memory again
2	None	Empty1)	
3	Telephone	"Telephone"	
4	Status telephone mute mode (pin 2 of multi-pin connector III)	If output active = display "on". If output inactive = display "off".	

1) Empty means in this case: Display zone is blank

Break down of display content for display group number 005

Display group 005						
Read measured value block 5			⇒	◂ Indicated on display		
xxx	xxx	xxx	xxx			
1	2	3	4	◂ Display zones	Specification	Evaluation
				Empty1)		=> page 32
			Empty1)			
		OK or not OK			"OK"	
	Communication to CD changer/CD player				"CD connect"	

1) Empty means in this case: Display zone is blank

satelettronica

Evaluating display group number 005

Display zone	Description	Display	Rectifying fault
1	Communication to CD-changer/CD player (even if no CD-changer is coded)	"CD connect"	- Visually check wiring Check correct location and secure fit of connectors in relevant circuit and at the same time observe the display - If the display content does not change during operation, the fault should be eliminated or the affected component renewed Perform functional check Interrogate fault memory again
2	Communication to CD changer OK or not OK.	"OK" if a CD changer is connected. "not OK" if a CD changer is connected, the display "not OK" is incorrect => Rectifying fault. "not OK" if no CD changer is connected, the display "not OK" is correct.	
3	None	Empty1)	
4	None	Empty1)	

1) Empty means in this case: Display zone is blank

If the displayed values in all display zones are OK:

- Press ⇒key.

Note:

After completing the function "Read measured value block" interrogate fault memory => Page 21 .

Ending output

- Press keys 0 and 6. (The function "End output" is selected with 06.)

-> Indicated on display:

```
Rapid data transfer      Q
06 End output
```

- Confirm entry with key Q.

-> Indicated on display:

```
Rapid data transfer      Help
Enter address word XX
```

- Switch off ignition.
- Disconnect fault reader V.A.G 1551.

3.8 - Self-diagnosis of navigation part in RNS with MFD

Check prerequisites:

- All fuses according to current flow diagram OK.
- Supply voltage OK. (at least 9.5 V).

Protected by copyright. Copying for private or commercial purposes, in part or in whole, is not permitted unless authorised by Volkswagen AG. Volkswagen AG does not guarantee or accept any liability with respect to the correctness of information in this document. Copyright by Volkswagen AG.

satelettronica

- Fault reader V.A.G 1551 or V.A.G 1552 connected.

Connecting fault reader => page 1 .

- Switch on ignition.
- Switch on printer with the Print key (indicator lamp in key lights up).
- Press key 1 for "Rapid data transfer" mode.

-> Indicated on display:

```
Rapid data transfer      HELP
Input address word XX
```

- Press keys 3 and 7. "37" enters the address word "Navigation".

Interrogate navigation unit version

- Confirm entry with key Q.

-> Indicated on display:

```
3B0919887 B     Navigation          0001
□
Coding     00000     WSC     00000
```

- Upper line Unit version No. of navigation system in RNS housing (Navigation) System designation Software version number
- Lower line Code number Dealership number1)

1)- Will be automatically stored in the radio unit when entering the system.

Indicated on display of radio/navigation system during self-diagnosis: "DIAG".

Notes:

- Radio part and navigation part of the Radio/Navigation system have different unit version numbers.
- The indicated unit version number is not the part number for the complete Radio/Navigation system.
- The part number for the complete Radio navigation system is printed on a sticker on the radio/navigation system housing!

-> Will be indicated on display:

```
Control unit does not answer!    HELP
```

- By pressing the "HELP" key a list of possible fault causes is printed out.
- After rectifying faults, enter address word 37 again for Navigation and confirm with Q.

-> Indicated on display:

```
3B0919887 B     Navigation          0001
□
Coding     00000     WSC     00000
```

- Press ⇒ key.

-> Indicated on display:

```
Rapid data transfer      HELP
Select function XX
```

- After the HELP key is pressed, a list of the possible functions is printed out.

List of selectable functions

	Page
01 - Interrogate navigation unit version	33

Protected by copyright. Copying for private or commercial purposes, in part or in whole, is not permitted unless authorised by Volkswagen AG. Volkswagen AG does not guarantee or accept any liability with respect to the correctness of information in this document. Copyright by Volkswagen AG.
satelettronica

02 -	Interrogate fault memory	34
05 -	Erase fault memory	35
06 -	End output	35
07 -	Code navigation system	37
08 -	Read measured value block	39
10 -	Adaption	45

Notes:

- Do not select further functions, which can be printed out after pressing the HELP key.
- After the function is completed the V.A.G 1551 returns to the following start position:

-> Indicated on display:

```
Rapid data transfer      HELP
Select function XX
```

Interrogating fault memory

Note:

The displayed fault information is not constantly up-dated but only when initiating the self-diagnosis or with the function 05 "Erase fault memory".

- Switch on printer with the Print key (indicator lamp in key lights up).

-> Indicated on display:

```
Rapid data transfer      HELP
Select function XX
```

- Press keys 0 and 2. (The function "Interrogate fault memory" is selected with 02.)

-> Indicated on display:

```
Rapid data transfer      Q
02 - Interrogate fault memory
```

- Confirm entry with key Q.

-> The number of stored faults appears in the display.

```
X faults recognized!
```

The stored faults are displayed and printed out one after the other.

- Carry out elimination of printed-out fault as stated in fault table => page 36.

-> If "No fault recognised" is displayed the programme will return to the start point after pressing ⇒ key.

```
No fault recognized!
```

-> Indicated on display:

```
Rapid data transfer      HELP
Select function XX
```

If something else is displayed:

=> Fault reader operating instructions

- End output (function 06) => page 35
- Switch off ignition and separate diagnostic connections.

Volkswagen AG. Volkswagen AG does not guarantee or accept any liability with respect to the correctness of information in this document. Copyright by Volkswagen AG.
Protected by copyright. Copying, distribution and utilisation is prohibited unless authorised by Volkswagen AG. Offenders are liable for damages. All rights are reserved in the event of the grant of a patent or the registration of a utility model or design.
satelettronica

Protected by copyright. Copying for private or commercial purposes, in part or in whole, is not permitted unless authorised by Volkswagen AG. Volkswagen AG does not guarantee or accept any liability with respect to the correctness of information in this document. Copyright by Volkswagen AG.

satelettronica

Erasing fault memory

Note:

After erasing the fault memory its contents will automatically be indicated. If the fault memory cannot be erased, interrogate fault memory again and rectify faults.

Prerequisites

- Fault memory interrogated =>Page 34 .
- All faults repaired.

After fault memory has been successfully interrogated:

-> Indicated on display:

```
Rapid data transfer      HELP
Select function XX
```

- Press keys 0 and 5. (05 selects the "Erase fault memory" function.)

-> Indicated on display:

```
Rapid data transfer      Q
05 Erase fault memory
```

- Confirm entry with key Q.

-> Indicated on display:

```
Rapid data transfer
Fault memory is erased!
```

The fault memory is now erased.

- Press ⇒ key.

-> Indicated on display:

```
Rapid data transfer     HELP
Select function XX
```

Notes:

- ◆

```
Warning!
Fault memory was not interrogated
```

-> If this appears in the display, the test sequence is faulty.

- ◆

```
Rapid data transfer
Fault memory was not interrogated
```

-> If this appears in the display, the test sequence is faulty.

Adhere exactly to test sequence: First interrogate fault memory, if necessary repair faults, then erase.

Ending output

- Press keys 0 and 6. (The function "End output" is selected with 06.)

-> Indicated on display:

```
Rapid data transfer     Q
06 End output
```

- Confirm entry with key Q.

-> Indicated on display:

```
Rapid data transfer      Help
Enter address word XX
```

- Switch off ignition.
- Disconnect fault reader V.A.G 1551.

Fault table

Notes:

- The following table lists all the faults, with the corresponding 5 digit code numbers, that can be recognized by the Radio/Navigation system and printed out by the V.A.G 1551.
- Fault codes appear only on print-out.
- Before replacing components, check the wiring and connections to these components as well as the earth connections, according to current flow diagram.
- When repair has been carried out, the fault memory must always be interrogated again with the fault reader V.A.G 1551 and erased.

V.A.G. 1551 print out	Possible fault cause	Possible effects	Fault elimination
00481 Traffic information control unit No communication	Wiring defective Traffic information control unit defective Traffic information control unit not fitted	No data transfer between radio/navigation system and traffic information control unit Dynamics not functioning	- Read measured value block => Page 48 Renew traffic information control unit

V.A.G. 1551 print out	Possible fault cause	Possible effects	Fault elimination
00625 Speed signal No signal	Wiring open circuit to ABS control unit	Navigation part not functioning	- Read measured value block => Page 39 Check wiring using current flow diagram Perform self-diagnosis of ABS system Renew radio/navigation system

V.A.G. 1551 print out	Possible fault cause	Possible effects	Fault elimination
00668 Vehicle voltage terminal 30 Signal too weak* * This fault can also be stored if the starter was operated for more than 10 seconds.	Battery voltage below 9.5 Volt Battery insufficiently charged Battery defective Alternator defective	Navigation part does not function or function is poor	- Read measured value block => page 39 Check battery, charge if necessary => Electrical system, Repair group 27 Check alternator => Current flow diagrams, Electrical fault finding and Fitting locations binder
	Several electrical consumers switched on	Navigation function not OK.	- Switch off all unnecessary consumers

satelettronica

V.A.G. 1551 print out	Possible fault cause	Possible effects	Fault elimination
00862 Navigation aerial (GPS) - R50/R52 Open circuit/shortto positive Short toearth	Wiring defective Navigation aerial (GPS) defective	Navigation function not OK. (determination of position)	- Read measured value block => page 39 Check wiring using current flow diagram Check navigation aerial (GPS) or renew if necessary

V.A.G. 1551 print out	Possible fault cause	Possible effects	Fault elimination
00867 Connection to ABS control unit No signal	Wiring defective ABS wheel sensors defective ABS control unit defective	Navigation not OK.	- Perform adaptation of the wheel impulse/the tyre circumference => page 39 Perform ABS self-diagnosis Check wiring using current flow diagram

V.A.G. 1551 print out	Possible fault cause	Possible effects	Fault elimination
01311 Data bus information No signal	Wiring defective Radio/navigation system defective Sound system (DSP) defective	Sound system function (DSP) not OK.	- Read measured value block => page 39 Check wiring using current flow diagram
65535 Control unit defective	Radio/navigation system defective	Radio/navigation system functions not OK.	- Renew radio/navigation system

During the fault diagnosis it is not possible to recognize if a fault exists after fault rectification.

Therefore after each fault rectification and erasure of the fault memory it is necessary to interrogate the fault memory again.

3.9 - Coding navigation system

The following radio functions can be coded:

- Traffic information control unit (TMC-Box)
- GSM telephone

Breakdown of code number:

00	Not relevant, always 0
0	Not relevant, always 0
0	Not relevant, always 0

satelettronica

1 Code number for traffic information control unit and GSM telephone

Performing coding

- Press keys 0 and 7.
- Confirm entry with key Q.

```
Coding control unit
Enter code number XXXXX      (0-32000)
```

-> Indicated on display:

- Enter code number compiled from code table

Code number				Settings for navigation system
1st + 2nd	3rd	4th	5th	Position
00				Code number not relevant Always 0
	0			Code number not relevant Always 0
		0		Code number not relevant Always 0
			1 2 3 4	Code number for navigation configuration Traffic information control unit and GSM telephone not fitted Traffic information control unit fitted, GSM telephone not fitted Traffic information control unit not fitted, GSM telephone fitted Traffic information control unit and GSM telephone fitted

```
Coding control unit      Q
Enter code number 00001      (0-32000)
```

-> Indicated on display, e.g.:

- Confirm entry with key Q.

-> Indicated on display:

```
Rapid data transfer      HELP
Select function XX
```

Ending function:

- Press keys 0 and 6. (The function "End output" is selected with 06.)
- End coding with ⇒key.

-> Indicated on display:

```
Rapid data transfer      Q
06 End output
```

- Confirm entry with key Q.

-> Indicated on display:

```
Rapid data transfer      Help
Enter address word XX
```

The tester is again in basic function.

Protected by copyright. Copyright by Volkswagen AG. Volkswagen AG does not guarantee or accept any liability with respect to the correctness of information in this document. Copyright by Volkswagen AG. Unauthorised use, in part or in whole, is prohibited unless authorised by Volkswagen AG.
satelettronica

3.10 - Read measured value block

The self-diagnosis continually monitors the input signals and voltages required to operate the radio/navigation system.

The measured value block is divided into 4 display group numbers. The assignment of the individual display zones can be taken from the display group overview =>Page 40 .

- Connect fault reader V.A.G 1551, select operating mode 1 "Rapid data transfer", switch on ignition and enter address word 37 "Navigation".

After displaying the control unit identification:

- Press ⇒ key.

-> Indicated on display:

```
Rapid data transfer      HELP
Select function XX
```

- Press keys -0- and -8- (08 initiates the "Read measured value block" function).

-> Indicated on display:

```
Rapid data transfer      Q
08 - Read measured value block
```

- Confirm entry with the Q key.

-> Indicated on display:

```
Read measured value block      Help
Enter display group number XXX
```

The display group number 001 is an example, to illustrate the sequence.

- Press keys 0, 0 and 1 for "Display group number 1" and confirm entry with Q key.

-> Indicated on display:
(1...4 = Display zones)

```
Read measured value block      1
"
     1      2      3      4
```

Note:

To change to another display group proceed as follows:

Display group	V.A.G 1551	V.A.G 1552
Higher	Press key 3	Press ↑key
Lower	Press key 1	Press ↓key
Skip	Press key C	Press key C

- Displayed after pressing C key.

-> Indicated on display:

```
Read measured value block      Help
Enter display group number XXX
```

- Now enter the display group number required.

Notes:

◆ The actual sender and sensor values are always shown on the display.

Protected by copyright. Copying for private or commercial purposes, in part or in whole, is not permitted unless authorised by Volkswagen AG. Volkswagen AG does not guarantee or accept any liability with respect to the correctness of information in this document. Copyright by Volkswagen AG.
satelettronica

- Other display groups are possible but these are not required for fault finding!

3.11 - Display group overview

Break down of display content for display group number 001

Display group 001						
Read measured value block 1 ⇒				◂ Indicated on display		
xxx	xxx	xxx	xxx	◂ Display zone	Specification	Evaluation
1	2	3	4	S contact on or off (Radio does not switch off)	S contact on = Display "on". S contact off = Display "off".	=> Page 40
				Dimming of lights in %	Light off = "0%" Light on = "20 - 95%", according to position of lighting control for switches and instruments	
		Voltage supply in volts			approx. battery voltage	
	Road speed signal from speedometer				"1" or "0"	

Evaluating display group number 001

Display zone	Description	Display	Rectifying fault
	Road speed signal from speedometer	"1" or "0" The display must always jump back and forth between "1" and "0" when a front wheel is being turned.	- Visually check wiring Check correct location and secure fit of connectors in relevant circuit and at the same time observe the display If the display content does not change during operation, the fault should be eliminated or the affected component renewed Erase fault memory Perform functional check Interrogate fault memory again
2	Voltage supply in volts	Approx. battery voltage	
3	Dimming of lights in %	Light off = display "0%" Light on = infinitely variable brightness control for switches and instruments with switches and instruments lighting control, display = "20 - 95%", according to position of control.	
4	S contact on or off (Radio does not switch off)	S contact on = display "on". S contact off = display "off".	

satelettronica
Protected by copyright. Copying for private or commercial purposes, in part or in whole, is not permitted unless authorised by Volkswagen AG. Volkswagen AG does not guarantee or accept any liability with respect to the correctness of information in this document. Copyright by Volkswagen AG.

Break down of display content for display group number 002

Display group 002 Read measured value block 2			⇒	◂ Indicated on display		
xxx	xxx	xxx	xxx			
1	2	3	4	◂ Display zones	Specification	Evaluation
				Empty1)		=> Page 41
			Status input terminal 15		"Term.15 ON"	
		Empty1)				
	Status input reverse light switch				"Rev. OFF" or "Rev. ON"	

1) Empty means in this case: Display zone is blank

Evaluating display group number 002

Display zone	Description	Display	Rectifying fault
1	Status input reverse light switch	"Rev. OFF" Reverse gear not selected "Rev. ON" Reverse gear selected	- Visually check wiring Check correct location and secure fit of connectors in relevant circuit and at the same time observe the display If the display content does not change during operation, the fault should be eliminated or the affected component renewed Perform functional check Interrogate fault memory again
2	None	Empty1)	
3	Status input terminal 15	"Term.15 ON" if term.15 fitted to RNS "Term.15 OFF" if ignition on, but term. 15 not fitted to RNS => Rectifying fault	
4	None	Empty1)	

1) Empty means in this case: Display zone is blank

Break down of display content for display group number 003

Display group 003 Read measured value block 3			⇒	◂ Indicated on display		
xxx	xxx	xxx	xxx			
1	2	3	4	◂ Display zones	Specification	Evaluation
				Empty1)		=> Page 42
			Empty1)			
		OK or not OK.			"OK"	
	Status voltage supply GPS receiver				"GPS-Aer."	

1) Empty means in this case: Display zone is blank

satelettronica
Protected by copyright. Copyright by Volkswagen AG. Copying for private or commercial purposes, in part or in whole, is not permitted unless authorised by Volkswagen AG. Volkswagen AG does not guarantee or assume any liability with respect to the correctness of information in this document.

Evaluating display group number 003

Display zone	Description	Display	Rectifying fault
1	Status voltage supply GPS receiver	"GPS-Aer."	- Visually check wiring Check correct location and secure fit of connectors in relevant circuit and at the same time observe the display If the display content does not change during operation, the fault should be eliminated or the affected component renewed Perform functional check Interrogate fault memory again
2	Voltage supply OK or not OK.	"OK" or "not OK"	
3	None	Empty1)	
4	None	Empty1)	

1) Empty means in this case: Display zone is blank

Break down of display content for display group number 004

Display group 004 Read measured value block 4			⇒	◂ Indicated on display		
xxx	xxx	xxx	xxx			
1	2	3	4	◂ Display zones	Specification	Evaluation
				Empty1)		
			Empty1)			=> Page 42
		Status of communication to second display in dash panel insert 2)			"OK"	
	Second display in dash panel insert 2)				"ext. Displ."	

1) Empty means in this case: Display zone is blank

2) On vehicles with second display in dash panel insert only

Evaluating display group number 004

Display zone	Description	Display	Rectifying fault
1	Second display in dash panel insert 2)	"ext. Displ."	- Visually check wiring Check correct location and secure fit of connectors in relevant circuit and at the same time observe the display If the display content does not change during operation, the fault should be eliminated or the affected component renewed Perform functional check Interrogate fault memory again
2	Status of communication to second display in dash panel insert 2)	"OK" or "not OK"	
3	None	Empty1)	

Protected by copyright. Copying for private or commercial purposes, in part or in whole, is not permitted unless authorised by Volkswagen AG. Volkswagen AG does not guarantee or accept any liability with respect to the correctness of information in this document. Copyright by Volkswagen AG.

satelettronica

Display zone	Description	Display	Rectifying fault
4	None	Empty1)	

1) Empty means in this case: Display zone is blank

2) On vehicles with second display in dash panel insert only

Break down of display content for display group number 005

Display group 005						
Read measured value block 5 ⇒				◂ Indicated on display		
xxx	xxx	xxx	xxx			
1	2	3	4	◂ Display zones	Specification	Evaluation
				Telephone message from telephone control unit 2)	"1 or 0"	=> Page 43
				TMC box message from traffic information control unit 1)	"1 or 0"	
		OK or not OK			"OK"	
	Data bus communication				"Data bus"	

1) On vehicles with RNS with traffic information control unit only

2) On vehicles with telephone control unit only

Evaluating display group number 005

Display zone	Description	Display	Rectifying fault
1	Data bus communication	"Data bus"	- Check if respective component is installed (concerns TMC box or GSM telephone) Visually check wiring Check correct location and secure fit of connectors in relevant circuit and at the same time observe the display - If the display content does not change during operation, the fault should be eliminated or the affected component renewed Perform functional check Interrogate fault memory again
2	Data bus communication OK or not OK.	"OK" or "not OK"	
3	TMC box message from control unit1) received not received	"0" "1"	
4	Telephone message from telephone control unit 2) received not received	"0" "1"	

1) On vehicles with RNS with traffic information control unit only

2) On vehicles with telephone control unit only

Break down of display content for display group number 006

Display group 006		
Read measured value block 6	⇒	◂ Indicated on display

Protected by copyright. Copying for private or commercial purposes, in part or in whole, is not permitted unless authorised by Volkswagen AG. Volkswagen AG does not guarantee or accept any liability with respect to the correctness of information in this document. Copyright by Volkswagen AG.
satelettronica

xxx	xxx	xxx	xxx	Display zones	Specification	Evaluation
1	2	3	4	Speed right in km/h 1)	"...km/h"	=> Page 44
				Impulse sender right 1)	"right"	
				Speed left in km/h	"...km/h"	
				Impulse sender left	"left"	

1) The right wheel speed display is discontinued on newer RNS models

Evaluating display group number 006

Display zone	Description	Display	Rectifying fault
1	Road speed signal from ABS control unit from impulse sender left	"Left"	- Visually check wiring Check correct location and secure fit of connectors in relevant circuit and at the same time observe the display If the display content does not change during operation, the fault should be eliminated or the affected component renewed Perform functional check Interrogate fault memory again
2	Road speed signal from ABS control unit from impulse sender left in kilometres per hour.	"... km/h" Display of road speed dependent on how fast left wheel is currently turning.	
3	Road speed signal from ABS control unit from impulse sender right.	"Right"	
4	Road speed signal from ABS control unit from impulse sender left in kilometres per hour.	"... km/h" Display of road speed dependent on how fast right wheel is currently turning.	

If the displayed values in all display zones are OK:

- Press ⇒key.

Note:

After completing the function "Read measured value block" interrogate fault memory => Page 34 .

Ending output

- Press keys 0 and 6. (The function "End output" is selected with 06.)

-> Indicated on display:

```
Rapid data transfer      Q
06 End output
```

- Confirm entry with key Q.

-> Indicated on display:

```
Rapid data transfer      Help
Enter address word XX
```

- Switch off ignition.

satelettronica

- Disconnect fault reader V.A.G 1551.

Adaption

The navigation system uses, amongst other things, the wheel circumference and ABS wheel sensors to calculated distance.

Using the function adaption the following changes can be made and stored:

- Changing tyre size
- Changing the impulse number for ABS wheel sensors
- RNS system "with or without traffic information control unit"

The individual functions are called up using the relevant adaption channel number (see adaption table).

Note:

For new units, adaption of traffic information control unit is performed via the navigation system coding, => Coding navigation system, => Page 37 .

Adaption table:

Adaption channel	Adaption functions
01	Wheel circumference in mm => Page 45
02	Impulse number for ABS wheel sensor => Page 47
06	Adapt RNS system "with or without traffic information control unit" => Page 48

Note:

After changing an adaption value or ending an adaption channel the function "10 - Adaption" must be performed to select another adaption channel!

Wheel circumference adaption (matching)

Note:

Wheel circumference adaption is only necessary when the Radio/Navigation system unit is exchanged.

- Press ⇒ key.

-> Indicated on display:

```
Rapid data transfer      HELP
Select function XX
```

- Press keys 1 and 0. (10 selects the "Adaption" function.)

-> Indicated on display:

```
Rapid data transfer      Q
10 - Adaption
```

- Confirm entry with key Q.

-> Indicated on display:

```
Adaption
Enter channel number XX
```

satelettronica
Protected by copyright. Copyright by Volkswagen AG. Volkswagen AG does not guarantee or accept any liability with respect to the correctness of information in this document. Copyright by Volkswagen AG. Not permitted unless authorised by Volkswagen AG. Not to be used for commercial purposes, in part or in whole, nor to be made available to third parties.

- Press keys 0 and 1. ("channel 1" is selected with 01.)

Note:

◆ An incorrect entry can be corrected by pressing the C key.

- Confirm entry with key Q.

-> Indicated on display:

```
Channel 1     Adaption     2
```

The selected channel and actual stored wheel circumference in mm are displayed in the top line.

- Press ⇒ key.

-> Indicated on display:

```
Channel 1     Adaption     1930
Enter matching value XXXXX
```

- Enter new wheel circumference, when doing this place a 0 before the 4 digit number (e.g. 01915).

=>Table for circumferences, Page 46 .

- Confirm entry with key Q.

-> Indicated on display:

```
Channel 1     Adaption     1975     Q
```

- Confirm entry with key Q.

-> Indicated on display:

```
Channel 1     Adaption     1975     Q
Store amended value?
```

- Confirm entry with key Q.

-> Indicated on display:

```
Channel 1     Adaption     1975
Amended value is stored
```

- Press ⇒ key.
- Press keys 0 and 6. (06 selects the "End output" function.)

3.12 - Table for tyre circumference

Notes:

The correct tyre circumference can be determined for the given tyre sizes from the following table. This can then be used to adapt the tyre circumference on the radio/navigation system.

This is only necessary when the Radio/Navigation system unit is exchanged.

Adaption of the Radio/Navigation system when fitting tyres of another sizes is not necessary as the system will recalibrate itself.

Protected by copyright. Copyright by Volkswagen AG. Volkswagen AG does not guarantee or accept any liability with respect to the correctness of information in this document. Copying for private or commercial purposes, in part or in whole, is not permitted unless authorised by Volkswagen AG.
satelettronica

Tyre designation

Tyre circumference in mm

155/70 R13	1670
175/65 R13	1700
185/55 R14	1710
195/45 R15	1700

Adaption of ABS wheel sensor impulses

Note:

Adaption of the ABS wheel sensors is only necessary when the Radio/Navigation system unit is exchanged.

-> Indicated on display:

```
Rapid data transfer      HELP
Select function XX
```

- Press keys 1 and 0. (10 selects the "Adaption" function.)

-> Indicated on display:

```
Rapid data transfer      Q
10  Adaption
```

- Confirm entry with key Q.

-> Indicated on display:

```
Adaption
Enter channel number XX
```

- Press keys 0 and 2. ("Channel 2" is selected with 02.)

Note:

◆ An incorrect entry can be corrected by pressing the C key.

- Confirm entry with key Q.

-> Indicated on display:

```
Channel 2     Adaption     45
```

The selected channel and actual impulse number for the ABS wheel sensor are displayed in the top line.

- Press ⇒ key.

-> Indicated on display:

```
Channel 2     Adaption     45
Enter adaption value 00048
```

- Enter new impulse number, when doing this place three zeros before the 2 digit number (e.g. 00043).

Protected by copyright. Copying for private or commercial purposes, in part or in whole, is not permitted unless authorised by Volkswagen AG. Volkswagen AG does not guarantee or accept any liability with respect to the correctness of information in this document. Copyright by Volkswagen AG.
satelettronica

Note:

For the Polo the standard impulse number is 43.

- Confirm entry with key Q.

-> Indicated on display:

```
Channel 2     Adaption     43     Q
```

- Confirm entry with key Q.

-> Indicated on display:

```
Channel 2     Adaption     43     Q
Store amended value?
```

- Confirm entry with key Q.

-> Indicated on display:

```
Channel 2     Adaption     43
Amended value is stored
```

- Press ⇒ key.
- Press keys 0 and 6. (06 selects the "End output" function.)

Adapting RNS system "with or without traffic information control unit"

Note:

For new units, adaption of traffic information control unit is performed via the navigation system coding, => Coding navigation system, => Page 37 .

-> Indicated on display:

```
Rapid data transfer     HELP
Select function XX
```

- Press keys 1 and 0. (10 selects the "Adaption" function.)

-> Indicated on display:

```
Rapid data transfer     Q
10 - Adaption
```

- Confirm entry with key Q.

-> Indicated on display:

```
Adaption
Enter channel number XX
```

- Press keys 0 and 6. ("Channel 6" is selected with 06.)

Note:

◆ An incorrect entry can be corrected by pressing the C key.

- Confirm entry with key Q.

-> Indicated on display:

```
Channel 6     Adaption     1
```

Protected by copyright. Copyright by Volkswagen AG. Volkswagen AG does not guarantee or accept any liability with respect to the correctness of information in this document. Copyright by Volkswagen AG. Reproduction, in part or whole, is permitted unless authorised by Volkswagen AG. Volkswagen AG. Volkswagen AG does not guarantee or accept any liability with respect to the correctness of information in this document. Copyright by Volkswagen AG. Protected by copyright. Copyright by Volkswagen AG. Reproduction, in part or whole, is permitted unless authorised by Volkswagen AG. Volkswagen AG. Volkswagen AG does not guarantee or accept any liability with respect to the correctness of information in this document. Copyright by Volkswagen AG. Protected by copyright. Copyright by Volkswagen AG. Reproduction, in part or whole, is permitted unless authorised by Volkswagen AG. Volkswagen AG. Volkswagen AG does not guarantee or accept any liability with respect to the correctness of information in this document. Copyright by Volkswagen AG.

satelettronica

The selected channel and the traffic information control unit status are displayed in the top line.

- Press ⇒ key.

-> Indicated on display:

```
Channel 6     Adaption     1
Enter adaption value 00000
```

- Enter new code number, when doing this place three zeros before the 2 digit number (e.g. 00000).

For the Polo the specification for vehicles with traffic information control unit via the adaption is 01 (active).

For the Polo the specification for vehicles without traffic information control unit via the adaption is 00 (not active).

- Confirm entry with key Q.

-> Indicated on display:

```
Channel 6     Adaption     00     Q
```

- Confirm entry with key Q.

-> Indicated on display:

```
Channel 6     Adaption     00     Q
Store amended value?
```

- Confirm entry with key Q.

-> Indicated on display:

```
Channel 6     Adaption     00
Amended value is stored
```

- Press ⇒ key.
- Press keys 0 and 6. (06 selects the "End output" function.)

4 - Radio/Navigation system self-diagnosis (RNS)

4.1 - Radio/Navigation system self-diagnosis (RNS)

4.2 - Self-diagnosis RNS

The radio/navigation system (RNS) combines the functions of a navigation system with that of a high quality RDS car radio.

Installed in the systems double DIN housing are

- a RDS radio receiver
- a dot matrix liquid crystal display
- a navigation system with GPS satellite receiver
- a CD-ROM drive for the audio and navigation system.

The self diagnosis must be initiated at the commencement of fault finding and the stored information interrogated with the

Protected by copyright. Copying for private or commercial purposes, in part or in whole, is not permitted unless authorised by Volkswagen AG. Volkswagen AG does not guarantee or accept any liability with respect to the correctness of information in this document. Copyright by Volkswagen AG.

satelettronica

Vehicle Diagnosis, Testing and Information system VAS 5051 or

Fault reader V.A.G 1551 or

Vehicle system tester V.A.G 1552.

Note:

The following description deals only with the fault reader V.A.G 1551.

The radio part and the navigation system have different address words for the self-diagnosis.

Performing self-diagnosis of radio part
=> Self-diagnosis of radio systems from page 19

Performing self-diagnosis of navigation system => Self-diagnosis of navigation system from page 32

4.3 - Self-diagnosis of radio part in RNS

Measures for rectifying commonly occurring faults on particular models

=> Technical Service Handbook

If faults occur in the sensors and components being monitored, they will be stored in the fault memory together with an indication of the type of fault.

A maximum of 4 faults can be stored simultaneously.

Sporadic faults are automatically cancelled if they are not repeated in next 50 engine starts.

The self diagnosis must be initiated at the commencement of fault finding and the stored information interrogated with the

Vehicle Diagnosis, Testing and Information system VAS 5051 or

Fault reader V.A.G 1551 or

Vehicle system tester V.A.G 1552.

Connecting fault reader and selecting functions (interrogating unit version)

- Connect fault reader => page 1 .

Notes:

- The following test sequences are described for fault reader V.A.G 1551.
- The fault information displayed ensures that it is possible to determine the cause from the fault table and its notes and thus makes targeted repairs possible.
- Additional operating instructions can be called up with the fault reader HELP key.
- The ⇒ key serves to advance the programme sequence.
- In the operating mode 1 "Rapid data transfer" the function 00 "Automatic test sequence" can be carried out. Then all vehicle control units will be interrogated automatically.

- Switch on ignition.
- Switch on printer with the Print key (indicator lamp in key lights up).

-> Indicated on display:

```
Rapid data transfer     HELP
Input address word XX
```

satelettronica

- Press keys 5 and 6. "56" enters the address word "Radio".

-> Indicated on display:

```
Rapid data transfer      Q
56 Radio
```

- Confirm entry with Q key.

-> Indicated on display:

```
Rapid data transfer      Q
Tester sends address word 56
```

Interrogate radio unit version

-> Indicated on display:

```
1J0035152 D     Radio     0001
Coding     01407     WSC     00000
```

- Upper line Unit version number of radio part in RNS housing (Radio) System designation Software version number
- Lower line Code number Dealership number1)

1)- Will be automatically stored in the radio unit when entering the system.

Indicated on display of radio/navigation system during self-diagnosis: "DIAG".

Notes:

- Radio part and navigation part of the Radio/Navigation system have different unit version numbers.
- The displayed unit version number is not the part number for the complete Radio/Navigation system.
- The part number for the complete Radio/Navigation system is printed on a sticker on the radio/navigation system housing!

- Press ⇒ key.

-> Indicated on display:

```
Rapid data transfer     HELP
Select function XX
```

-> Will be indicated on display:

```
Control unit does not answer!     HELP
```

- By pressing the "HELP" key a list of possible fault causes is printed out.
- After rectifying faults, enter address word 56 for radio again and confirm with Q.

-> Indicated on display:

```
1J0035152 D     Radio     0001
Coding     01407     WSC     00000
```

- Press ⇒ key.

-> Indicated on display:

```
Rapid data transfer     HELP
Select function XX
```

- After the HELP key is pressed, a list of the possible functions is printed out.

List of selectable functions

01 -	Interrogate radio unit version	50
02 -	Interrogate fault memory	52

Protected by copyright. Copyright by Volkswagen AG. Volkswagen AG does not guarantee or accept any liability with respect to the correctness of information in this document. Copyright by Volkswagen AG. Volkswagen AG, Volkswagen AG, authorised, is not permitted to use, in part or in whole, is not permitted for commercial purposes.
satelettronica

Protected by copyright. Copying for private or commercial purposes, in part or in whole, is not permitted unless authorised by Volkswagen AG. Volkswagen AG does not guarantee or accept any liability with respect to the correctness of information in this document. Copyright by Volkswagen AG.

03 -	Final control diagnosis	55
05 -	Erase fault memory	53
06 -	End output	53
07 -	Code radio functions	57
08 -	Read measured value block	58

Notes:

- Do not select further functions, which can be printed out after pressing the HELP key.
- After the function is completed the V.A.G 1551 returns to the following start position:

-> Indicated on display:

```
Rapid data transfer     HELP
Select function XX
```

Interrogating fault memory

Note:

The displayed fault information is not constantly up-dated, but only when initiating the self-diagnosis or with the function 05 "Erase fault memory".

- Switch on printer with the Print key (indicator lamp in key lights up).

-> Indicated on display:

```
Rapid data transfer     HELP
Select function XX
```

- Press keys 0 and 2. (The function "Interrogate fault memory" is selected with 02.)

-> Indicated on display:

```
Rapid data transfer     Q
02 - Interrogate fault memory
```

- Confirm entry with key Q.

-> The number of stored faults appears in the display.

```
X faults recognized!
```

The stored faults are displayed and printed out one after another.

- Enter fault table at fault printed out and rectify fault => Page 54 .

-> If "No fault recognised" is displayed the programme will return to the start point after pressing ⇒ key.

```
No fault recognized!
```

-> Indicated on display:

```
Rapid data transfer     HELP
Select function XX
```

If something else is displayed:

=> Fault reader operating instructions

- End output (function 06) => Page 53 .
- Switch off ignition and separate diagnostic connections.

sateletronica

Erasing fault memory

Note:

After erasing the fault memory its contents will automatically be indicated. If the fault memory cannot be erased, interrogate fault memory again and rectify faults.

Prerequisites

- Fault memory interrogated =>Page 52 .
- All faults repaired.

After fault memory has been successfully interrogated:

-> Indicated on display:

```
Rapid data transfer      HELP
Select function XX
```

- Press keys 0 and 5. (05 selects the "Erase fault memory" function.)

-> Indicated on display:

```
Rapid data transfer      Q
05 Erase fault memory
```

- Confirm entry with key Q.

-> Indicated on display:

```
Rapid data transfer
Fault memory is erased!
```

The fault memory is now erased.

- Press ⇒ key.

-> Indicated on display:

```
Rapid data transfer      HELP
Select function XX
```

Notes:

-

```
Warning!
Fault memory was not interrogated
```

-> If this appears in the display, the test sequence is faulty.

-

```
Rapid data transfer
Fault memory was not interrogated
```

-> If this appears in the display, the test sequence is faulty.

Adhere exactly to test sequence: First interrogate fault memory, if necessary repair faults, then erase.

Ending output

- Press keys 0 and 6. (The function "End output" is selected with 06.)

-> Indicated on display:

```
Rapid data transfer      Q
06 End output
```

- Confirm entry with key Q.

-> Indicated on display:

Protected by copyright. Copying for private or commercial purposes, in part or in whole, is not permitted unless authorised by Volkswagen AG. Volkswagen AG does not guarantee or accept any liability with respect to the correctness of information in this document. Copyright by Volkswagen AG.
satelettronica

```
Rapid data transfer     Help
Enter address word XX
```

- Switch off ignition.
- Disconnect fault reader V.A.G 1551.

Fault table

Notes:

- The following table lists all the faults, with the corresponding 5 digit code numbers, that can be recognized by the radio/navigation system and printed out by the V.A.G 1551.
- Fault codes appear only on print-out.
- Before replacing components, check the wiring and connections to these components as well as the earth connections, according to current flow diagram.
- When repair has been carried out, the fault memory must always be interrogated again with the fault reader V.A.G 1551 and erased.

V.A.G. 1551 print out	Possible fault cause	Possible effects	Fault elimination
00668 Vehicle voltage terminal 30 Signal too weak* * This fault can also be stored if the starter was operated for more than 10 seconds.	Battery voltage below 9.5 Volt Battery insufficiently charged Battery defective Alternator defective	Radio part does not function or function is poor	- Read measured value block => page 58 Check battery, charge if necessary => Electrical system, Repair group 27 Check alternator => Current flow diagrams, Electrical fault finding and Fitting locations binder

V.A.G. 1551 print out	Possible fault cause	Possible effects	Fault elimination
00849 S contact on ignition/starter switch - D Open circuit	Ignition/starter switch not OK. Wiring not OK. Radio/navigation system not OK.	Radio does not automatically switch on when ignition is switched on, even though radio was switched on when ignition was last switched off. With radio switched on and ignition switched on, radio switches off automatically after 1 hour.	- Read measured value block =>page 58 Check wiring using current flow diagram Check ignition/starter switch, renew if necessary

V.A.G. 1551 print out	Possible fault cause	Possible effects	Fault elimination
00852 Front loudspeaker			

Protected by copyright. Copying for private or commercial purposes, in part or in whole, is not permitted unless authorised by Volkswagen AG. Volkswagen AG does not guarantee or accept any liability with respect to the correctness of information in this document. Copyright by Volkswagen AG.
satelettronica

V.A.G. 1551 print out	Possible fault cause	Possible effects	Fault elimination
Short circuit Open circuit	Front speaker wiring short circuit or short circuit to loudspeaker windings Front bass speaker wiring opening circuit or open circuit in loudspeaker windings	One front loudspeaker not functioning One front bass loudspeaker not functioning	- Perform final control diagnosis => page 58 Check wiring using current flow diagram Renew defective loudspeaker

V.A.G. 1551 print out	Possible fault cause	Possible effects	Fault elimination
00853 Rear loudspeaker Short circuit Open circuit	Wiring short to earth to one rear loudspeaker or short circuit to loudspeaker windings Wiring open circuit to one rear loudspeaker or open circuit to loudspeaker windings	One rear loudspeaker not functioning One rear loudspeaker not functioning	- Perform final control diagnosis => page 58 Check wiring using current flow diagram Renew defective loudspeaker

V.A.G. 1551 print out	Possible fault cause	Possible effects	Fault elimination
V.A.G. 1551 print out	Possible fault cause	Possible effects	Fault elimination
00856 Aerial (radio) Short circuit Open circuit	Aerial wire defective Aerial wire not connected Aerial defective	No or poor radio reception	- Read measured value block => page 58 Check aerial wire Check wiring using current flow diagram Check aerial

V.A.G. 1551 print out	Possible fault cause	Possible effects	Fault elimination
01044 Control unit incorrectly coded	Radio/navigation system not coded	Radio functions or sound not OK. Incorrect fault entry in fault memory	- This fault message cannot be erased. Coding radio/navigation system => Page 57
65535 Control unit defective	Radio/navigation system defective	Radio/navigation system function not OK.	- Renew radio/navigation system

During the fault diagnosis it is not possible to recognize if a fault exists after fault rectification.

Therefore after each fault rectification and erasure of the fault memory it is necessary to interrogate the fault memory again.

4.4 - Final control diagnosis

The final control diagnosis is part of the electrical check.

The fault memory must be interrogated after the final control diagnosis.

Protected by copyright. Copying for private or commercial purposes, in part or in whole, is not permitted unless authorised by Volkswagen AG. Volkswagen AG does not guarantee or accept any liability with respect to the correctness of information in this document. Copyright by Volkswagen AG.

satelettronica

Initiating final control diagnosis

Note:

- The -C- key can be used to exit the test sequence at any time.

- Connect fault reader V.A.G 1551, select operating mode 1 "Rapid data transfer", switch on ignition and enter address word 56 "Radio".

-> Indicated on display:

```
Rapid data transfer     HELP
Select function XX
```

- Press keys 0 and 3 (03 selects the "final control diagnosis" function).

-> Indicated on display

```
Rapid data transfer     Q
03 - Final control diagnosis
```

- Confirm entry with key Q.

-> Indicated on display:

```
Rapid data transfer
Loudspeaker
```

The loudspeakers are tested with a test current.

If a loudspeaker circuit is recognized by the system as defective then a fault message is stored in the fault memory.

- Interrogate fault memory
- Service wiring or loudspeaker if necessary, erase fault memory and repeat final control diagnosis.

When final control diagnosis is OK:

-> Indicated on display:

```
Final control diagnosis
Radio display dash panel insert output
```

Currently the Polo is not equipped with a dash panel insert display, therefore this display is not relevant.

- Press ⇒ key.

-> Indicated on display:

```
Final control diagnosis
END
```

- Press ⇒ key.

-> Indicated on display:

```
Rapid data transfer     HELP
Select function XX
```

- Press keys 0 and 6. (The function "End output" is selected with 06.)

-> Indicated on display:

```
Rapid data transfer     Q
06 End output
```

- Confirm entry with key Q.

-> Indicated on display:

Protected by copyright. Copying for private or commercial purposes, in part or in whole, is not permitted unless authorised by Volkswagen AG. Volkswagen AG does not guarantee or accept any liability with respect to the correctness of information in this document. Copyright by Volkswagen AG.

satelettronica

```
Rapid data transfer      Help
Enter address word XX
```

The tester is again in basic function.

4.5 - Coding radio functions

The following radio functions can be coded:

- Sound adaption
- Number of loudspeakers
- Sound system
- Type of aerial

Breakdown of code number:

06	Code number for sound synchronisation
4	Code number for number of loudspeakers
0	Code number for sound system
3	Code number for CD changer and type of aerial

Performing coding

- Press keys 0 and 7.
- Confirm entry with key Q.

```
Coding control unit
Enter code number XXXXX      (0-32000)
```

-> Indicated on display:
- Enter code number compiled from code table

Code table:

Code number

Setting for tuning sound

Code number for basic settings

Code No. for number of loudspeakers

Code number for sound system

Code number for configuring radio

1st+2nd	3rd	4th	5th	Position
06				Sound tuning for Polo
	2 4			2 passive loudspeakers, front 4 passive loudspeakers
		0 2		No sound system With sound system (DSP)

Protected by copyright. Copying for private or commercial purposes, in part or in whole, is not permitted unless authorised by Volkswagen AG. Volkswagen AG does not guarantee or accept any liability with respect to the correctness of information in this document. Copyright by Volkswagen AG.
satelettronica

			1 3	Radio with active aerial Radio with CD changer and active aerial

```
Coding control unit      Q
Enter code number 06403      (0-32000)
```

-> Indicated on display, e.g.:

- Confirm entry with key Q.

-> Indicated on display:

```
1J0035152 D      Radio      0001
Coding      06403      WSC      00000
```

- Press ⇒ key.

-> Indicated on display:

```
Rapid data transfer      HELP
Select function XX
```

Read fault memory after completing the coding =>Page 53 .

Ending function:

- Press keys 0 and 6. (The function "End output" is selected with 06.)
- End coding with ⇒ key.

-> Indicated on display:

```
Rapid data transfer      Q
06 End output
```

- Confirm entry with key Q.

-> Indicated on display:

```
Rapid data transfer      Help
Enter address word XX
```

The tester is again in basic function.

Protected by copyright. Copying for private or commercial purposes, in part or in whole, is not permitted unless authorised by Volkswagen AG. Volkswagen AG does not guarantee or accept any liability with respect to the correctness of information in this document. Copyright by Volkswagen AG.

satelettronica

4.6 - Read measured value block

The self-diagnosis continually monitors the input signals and voltages required to operate the radio/navigation system.

The measured value block is divided into 4 display group numbers. The assignment of the individual display zones can be taken from the display group overview =>Page 14 .

- Connect fault reader V.A.G 1551, select operating mode 1 "Rapid data transfer", switch on ignition and enter address word 56 "Radio".

After displaying the control unit identification:

- Press ⇒ key.

-> Indicated on display:

```
Rapid data transfer      HELP
Select function XX
```

- Press keys -0- and -8- (08 initiates the "Read measured value block" function).

-> Indicated on display:

```
Rapid data transfer      Q
08 - Read measured value block
```

- Confirm entry with the Q key.

-> Indicated on display:

```
Read measured value block      Help
Enter display group number XXX
```

The display group number 001 is an example, to illustrate the sequence.

- Press keys 0, 0 and 1 for "Display group number 1" and confirm entry with Q key.

-> Indicated on display:
(1...4 = Display zones)

```
Read measured value block      1
"
     1      2      3      4
```

Note:

To change to another display group proceed as follows:

Display group	V.A.G 1551	V.A.G 1552
Higher	Press key 3	Press ↑key
Lower	Press key 1	Press ↓key
Skip	Press key C	Press key C

- Displayed after pressing C key.

-> Indicated on display:

```
Read measured value block      Help
Enter display group number XXX
```

- Now enter the display group number required.

Notes:

- The actual sender and sensor values are always shown on the display.
- Other display groups are possible but these are not required for fault finding!

4.7 - Display group overview

Break down of display content for display group number 001

Display group 001						
Read measured value block 1 ⇒				◂ Indicated on display		
xxx	xxx	xxx	xxx			
1	2	3	4	◂ Display zone	Specification	Evaluation
				S contact on or off (Radio does not switch off)	S contact on = Display "on". S contact off = Display "off".	=> page 60
				Dimming of lights in %	Light off = "0%" Light on = "20 - 95%", according to position of lighting control for switches and instruments	
		Voltage supply in volts			approx. battery voltage	

Protected by copyright. Copying for private or commercial purposes, in part or in whole, is not permitted unless authorised by Volkswagen AG. Volkswagen AG does not guarantee or accept any liability with respect to the correctness of information in this document. Copyright by Volkswagen AG.
satelettronica

Road speed signal from speedometer	"1" or "0"	

Evaluating display group number 001

Display zone	Description	Display	Rectifying fault
	Road speed signal from speedometer	"1" or "0" The display must always jump back and forth between "1" and "0" when a front wheel is being turned.	- Visually check wiring Check correct location and secure fit of connectors in relevant circuit and at the same time observe the display If the display content does not change during operation, the fault should be eliminated or the affected component renewed Erase fault memory Perform functional check Interrogate fault memory again
2	Voltage supply in volts	Approx. battery voltage	
3	Dimming of lights in %	Light off = display "0%" Light on = infinitely variable brightness control for switches and instruments with switches and instruments lighting control, display = "20 - 95%", according to position of control.	
4	S contact on or off (Radio does not switch off)	S contact on = display "on". S contact off = display "off".	

Break down of display content for display group number 002

Display group 002						
Read measured value block 2 ⇒				◂ Indicated on display		
xxx	xxx	xxx	xxx			
1	2	3	4	◂ Display zones	Specification	Evaluation
				OK, short or open circuit	"OK"	=> page 61
				Loudspeakers rear	"Lsp. rear"	
				OK, short or open circuit	"OK"	
				Loudspeakers front	"Lsp. front"	

Protected by copyright. Copying for private or commercial purposes, in part or in whole, is not permitted unless authorised by Volkswagen AG. Volkswagen AG does not guarantee or accept any liability with respect to the correctness of information in this document. Copyright by Volkswagen AG.
satelettronica

Evaluating display group number 002

Display zone	Description	Display	Rectifying fault
1	Loudspeakers front	Lsp. front	- Visually check wiring Check correct location and secure fit of connectors in relevant circuit and at the same time observe the display If the display content does not change during operation, the fault should be eliminated or the affected component renewed Perform functional check Interrogate fault memory again
2	OK, short or open circuit	OK, short circ., open circ.	
3	Loudspeakers rear	Lsp. rear	
4	OK, short or open circuit	OK, short circ., open circ.	

Break down of display content for display group number 003

Display group 003						
Read measured value block 3			⇒	◂ Indicated on display		
xxx	xxx	xxx	xxx			
1	2	3	4	◂ Display zones	Specification	Evaluation
				Empty1)		
				OK, short or open circuit	"OK"	=> page 61
		Aerial			"Aerial"	
	Passive or active				"Active"	

1) Empty means in this case: Display zone is blank

Evaluating display group number 003

Display zone	Description	Display	Rectifying fault
1	Passive operating aerial or active aerial with integrated amplifier	"Passive" or "active" aerial	- Visually check wiring Check correct location and secure fit of connectors in relevant circuit and at the same time observe the display If the display content does not change during operation, the fault should be eliminated or the affected component renewed Perform functional check Interrogate fault memory again
2	Aerial	"Aerial"	
3	OK, short or open circuit	OK, short circ., open circ.	
4	None	Empty1)	

1) Empty means in this case: Display zone is blank

Protected by copyright. Copying for private or commercial purposes, in part or in whole, is not permitted unless authorised by Volkswagen AG. Volkswagen AG does not guarantee or accept any liability with respect to the correctness of information in this document. Copyright by Volkswagen AG.
satelettronica

Break down of display content for display group number 004

Display group 004						
Read measured value block 4			⇒	◂ Indicated on display		
xxx	xxx	xxx	xxx			
1	2	3	4	◂ Display zones	Specification	Evaluation
				Status telephone mute	"on" or "off"	=> page 62
			Telephone		"Telephone"	
		Empty1)				
	Status control output of active amplifier (DSP)				"0"	

1) Empty means in this case: Display zone is blank

Evaluating display group number 004

Display zone	Description	Display	Rectifying fault
1	Status control output of active amplifier (DSP)	If control output OK = display "0" If control output not OK = display "1"	- Visually check wiring Check correct location and secure fit of connectors in relevant circuit and at the same time observe the display If the display content does not change during operation, the fault should be eliminated or the affected component renewed Perform functional check Interrogate fault memory again
2	None	Empty1)	
3	Telephone	"Telephone"	
4	Status telephone mute mode (pin 2 of multi-pin connector III)	If output active = display "on". If output inactive = display "off".	

1) Empty means in this case: Display zone is blank

Break down of display content for display group number 005

Display group 005						
Read measured value block 5			⇒	◂ Indicated on display		
xxx	xxx	xxx	xxx			
1	2	3	4	◂ Display zones	Specification	Evaluation
				Empty1)		=> page 63
			Empty1)			
		OK or not OK			"OK"	
	Communication to CD changer/CD player				"CD connect"	

1) Empty means in this case: Display zone is blank

satelettronica

Evaluating display group number 005

Display zone	Description	Display	Rectifying fault
1	Communication to CD-changer/CD player (even if no CD-changer is coded)	"CD connect"	- Visually check wiring Check correct location and secure fit of connectors in relevant circuit and at the same time observe the display - If the display content does not change during operation, the fault should be eliminated or the affected component renewed Perform functional check Interrogate fault memory again
2	Communication to CD changer OK or not OK.	"OK" if a CD changer is connected. "not OK" if a CD changer is connected, the display "not OK" is incorrect => Rectifying fault. "not OK" if no CD changer is connected, the display "not OK" is correct.	
3	None	Empty1)	
4	None	Empty1)	

1) Empty means in this case: Display zone is blank

If the displayed values in all display zones are OK:

- Press ⇒key.

Note:

After completing the function "Read measured value block", interrogate fault memory => Page 52

Ending output

- Press keys 0 and 6. (The function "End output" is selected with 06.)

-> Indicated on display:

```
Rapid data transfer      Q
06 End output
```

- Confirm entry with key Q.

-> Indicated on display:

```
Rapid data transfer      Help
Enter address word XX
```

- Switch off ignition.
- Disconnect fault reader V.A.G 1551.

4.8 - Self-diagnosis of navigation part in RNS

Measures for rectifying commonly occurring faults on particular models

=> Technical Service Handbook

Protected by copyright. Copying for private or commercial purposes, in part or in whole, is not permitted unless authorised by Volkswagen AG. Volkswagen AG does not guarantee or accept any liability with respect to the correctness of information in this document. Copyright by Volkswagen AG.
satelettronica

If faults occur in the sensors and components being monitored, they will be stored in the fault memory together with an indication of the type of fault.

A maximum of 4 faults can be stored simultaneously.

Sporadic faults are automatically cancelled if they are not repeated in next 50 engine starts.

The self diagnosis must be initiated at the commencement of fault finding and the stored information interrogated with the

Vehicle Diagnosis, Testing and Information system VAS 5051 or

Fault reader V.A.G 1551 or

Vehicle system tester V.A.G 1552.

Connecting fault reader and selecting functions (interrogating unit version)

- Connect fault reader => page 1 .

Notes:

- The following test sequences are described for fault reader V.A.G 1551.
- The fault information displayed ensures that it is possible to determine the cause from the fault table and its notes and thus makes targeted repairs possible.
- Additional operating instructions can be called up with the fault reader HELP key.
- The ⇒ key serves to advance the programme sequence.
- In the operating mode 1 "Rapid data transfer" the function 00 "Automatic test sequence" can be carried out. Then all vehicle control units will be interrogated automatically.

- Switch on ignition.
- Switch on printer with the Print key (indicator lamp in key lights up).
- Press key 1 for "Rapid data transfer" mode.

Interrogate navigation unit version

-> Indicated on display:

```
Rapid data transfer     HELP
Input address word XX
```

- Press keys 3 and 7. "37" enters the address word "Navigation".
- Confirm entry with key Q.

-> Indicated on display:

```
6N0919887     Navigation     0001
Coding     00000     WSC     00000
```

- Upper line Unit version No. of navigation system in RNS housing (Navigation) System designation Software version number
- Lower line Code number Dealership number1)

1)- Will be automatically stored in the radio unit when entering the system.

Indicated on display of radio/navigation system during self-diagnosis: "DIAG".

Notes:

- Radio part and navigation part of the Radio/Navigation system have different unit version numbers.
- The displayed unit version number is not the part number for the complete Radio/Navigation system.

Protected by copyright. Copying for private or commercial purposes, in part or in whole, is not permitted unless authorised by Volkswagen AG. Volkswagen AG does not guarantee or accept any liability with respect to the correctness of information in this document. Copyright by Volkswagen AG.
satelettronica

- The part number for the complete Radio/Navigation system is printed on a sticker on the radio/navigation system housing!

-> Will be indicated on display:

```
Control unit does not answer!      HELP
```

- By pressing the "HELP" key a list of possible fault causes is printed out.
- After rectifying faults, enter address word 37 again for Navigation and confirm with Q.

-> Indicated on display:

```
6N0919887     Navigation     0001
Coding     00000      WSC     00000
```

- Press ⇒ key.

-> Indicated on display:

```
Rapid data transfer      HELP
Select function XX
```

- After the HELP key is pressed, a list of the possible functions is printed out.

List of selectable functions

	Page
01 - Interrogate navigation unit version	64
02 - Interrogate fault memory	65
05 - Erase fault memory	66
06 - End output	67
07 - Code navigation system	37
08 - Read measured value block	70
10 - Adaption	76

Notes:

- Do not select further functions, which can be printed out after pressing the HELP key.
- After the function is completed the V.A.G 1551 returns to the following start position:

-> Indicated on display:

```
Rapid data transfer      HELP
Select function XX
```

Interrogating fault memory

Note:

The displayed fault information is not constantly up-dated but only when initiating the self-diagnosis or with the function 05 "Erase fault memory".

- Switch on printer with the Print key (indicator lamp in key lights up).

-> Indicated on display:

```
Rapid data transfer      HELP
Select function XX
```

- Press keys 0 and 2. (The function "Interrogate fault memory" is selected with 02.)

-> Indicated on display:

```
Rapid data transfer      Q
02 - Interrogate fault memory
```

Protected by copyright. Copying for private or commercial purposes, in part or in whole, is not permitted unless authorised by Volkswagen AG. Volkswagen AG does not guarantee or accept any liability with respect to the correctness of information in this document. Copyright by Volkswagen AG.
satelettronica

- Confirm entry with key Q.

-> The number of stored faults appears in the display.

```
X faults recognized!
```

The stored faults are displayed and printed out one after the other.

- Carry out elimination of printed-out fault as stated in fault table => page 67 .

-> If "No fault recognised" is displayed the programme will return to the start point after pressing ⇒ key.

```
No fault recognized!
```

-> Indicated on display:

```
Rapid data transfer      HELP
Select function XX
```

If something else is displayed:

=> Fault reader operating instructions

- End output (function 06) => Page 67
- Switch off ignition and separate diagnostic connections.

Erasing fault memory

Note:

After erasing the fault memory its contents will automatically be indicated. If the fault memory cannot be erased, interrogate fault memory again and rectify faults.

Prerequisites

- Fault memory interrogated =>Page 65 .
- All faults repaired.

After fault memory has been successfully interrogated:

-> Indicated on display:

```
Rapid data transfer      HELP
Select function XX
```

- Press keys 0 and 5. (05 selects the "Erase fault memory" function.)

-> Indicated on display:

```
Rapid data transfer      Q
05 Erase fault memory
```

- Confirm entry with key Q.

-> Indicated on display:

```
Rapid data transfer
Fault memory is erased!
```

The fault memory is now erased.

- Press ⇒ key.

-> Indicated on display:

```
Rapid data transfer      HELP
Select function XX
```

Protected by copyright. Copying for private or commercial purposes, in part or in whole, is not permitted unless authorised by Volkswagen AG. Volkswagen AG does not guarantee or accept any liability with respect to the correctness of information in this document. Copyright by Volkswagen AG.
satelettronica

Notes:

```
Warning!
Fault memory was not interrogated
```

-> If this appears in the display, the test sequence is faulty.

```
Rapid data transfer
Fault memory was not interrogated
```

-> If this appears in the display, the test sequence is faulty.

Adhere exactly to test sequence: First interrogate fault memory, if necessary repair faults, then erase.

Ending output

- Press keys 0 and 6. (The function "End output" is selected with 06.)

-> Indicated on display:

```
Rapid data transfer      Q
06 End output
```

- Confirm entry with key Q.

-> Indicated on display:

```
Rapid data transfer      Help
Enter address word XX
```

- Switch off ignition.
- Disconnect fault reader V.A.G 1551.

Fault table

Notes:

- The following table lists all the faults, with the corresponding 5 digit code numbers, that can be recognized by the Radio/Navigation system and printed out by the V.A.G 1551.
- Fault codes appear only on print-out.
- Before replacing components, check the wiring and connections to these components as well as the earth connections, according to current flow diagram.
- When repair has been carried out, the fault memory must always be interrogated again with the fault reader V.A.G 1551 and erased.

V.A.G. 1551 print out	Possible fault cause	Possible effects	Fault elimination
00481 Traffic information control unit No communication	Wiring defective Traffic information control unit defective Traffic information control unit not fitted	No data transfer between radio/navigation system and traffic information control unit Dynamics not functioning	- Read measured value block => page 76 Renew traffic information control unit

V.A.G. 1551 print out	Possible fault cause	Possible effects	Fault elimination
00625 Speed signal (GALA)			

Protected by copyright. Copying for private or commercial purposes, in part or in whole, is not permitted unless authorised by Volkswagen AG. Volkswagen AG does not guarantee or accept any liability with respect to the correctness of information in this document. Copyright by Volkswagen AG.
satelettronica

V.A.G. 1551 print out	Possible fault cause	Possible effects	Fault elimination
No signal	Sender for speed signal defective Wiring to sender for speed signal defective Dash panel defective Radio/navigation system defective	Navigation part does not function	- Read measured value block => page 70 Check wiring using current flow diagram Perform self-diagnosis of dash panel insert, renew dash panel insert if necessary => Electrical system, Repair group 01 Renew radio/navigation system

V.A.G. 1551 print out	Possible fault cause	Possible effects	Fault elimination
00668 Vehicle voltage terminal 30 Signal too weak* * This fault can also be stored if the starter was operated for more than 10 seconds.	Battery voltage below 9.5 Volt Battery insufficiently charged Battery defective Alternator defective	Navigation part does not function or function is poor	- Read measured value block => page 70 Check battery, charge if necessary => Electrical system, Repair group 27 Check alternator => Current flow diagrams, Electrical fault finding and Fitting locations binder
	Several electrical consumers switched on	Navigation function not OK.	- Switch off all unnecessary consumers

V.A.G. 1551 print out	Possible fault cause	Possible effects	Fault elimination
00862 Navigation aerial (GPS) - R50/R52 Open circuit/shortto positive Short toearth	Wiring defective Navigation aerial (GPS) defective	Navigation function not OK. (position determination)	- Read measured value block => page 70 Check wiring using current flow diagram Check navigation aerial (GPS) or renew if necessary
01311 Data bus information No signal	Wiring defective Radio/navigation system defective	Function of navigation system not OK.	- Read measured value block => page 70 Check wiring using current flow diagram

V.A.G. 1551 print out	Possible fault cause	Possible effects	Fault elimination
65535 Control unit defective	Radio/Navigation system defective	Radio/Navigation system functions not OK.	- Renew Radio/Navigation system

During the fault diagnosis it is not possible to recognize if a fault exists after fault rectification.

satelettronica

Therefore after each fault rectification and erasure of the fault memory it is necessary to interrogate the fault memory again.

4.9 - Coding navigation system

The following radio functions can be coded:

- Traffic information control unit (TMC-Box)
- GSM telephone

Breakdown of code number:

00	Not relevant, always 0
0	Not relevant, always 0
0	Not relevant, always 0
1	Code number for traffic information control unit and GSM telephone

Performing coding

- Press keys 0 and 7.
- Confirm entry with key Q.

```
Coding control unit
Enter code number XXXXX     (0-32000)
```

-> Indicated on display:

- Enter code number compiled from code table

Code number				Settings for navigation system
1st + 2nd	3rd	4th	5th	Position
00				Code number not relevant Always 0
	0			Code number not relevant Always 0
		0		Code number not relevant Always 0
			1 2 3 4	Code number for navigation configuration Traffic information control unit and GSM telephone not fitted Traffic information control unit fitted, GSM telephone not fitted Traffic information control unit not fitted, GSM telephone fitted Traffic information control unit and GSM telephone fitted

```
Coding control unit     Q
Enter code number 00001     (0-32000)
```

-> Indicated on display, e.g.:

- Confirm entry with key Q.

-> Indicated on display:

```
Rapid data transfer     HELP
Select function XX
```

satelettronica

Ending function:

- Press keys 0 and 6. (The function "End output" is selected with 06.)
- End coding with ⇒key.

-> Indicated on display:

```
Rapid data transfer      Q
06 End output
```

- Confirm entry with key Q.

-> Indicated on display:

```
Rapid data transfer      Help
Enter address word XX
```

The tester is again in basic function.

4.10 - Read measured value block

The self-diagnosis continually monitors the input signals and voltages required to operate the radio/navigation system.

The measured value block is divided into 4 display group numbers. The assignment of the individual display zones can be taken from the display group overview =>Page 40 .

- Connect fault reader V.A.G 1551, select operating mode 1 "Rapid data transfer", switch on ignition and enter address word 37 "Navigation".

After displaying the control unit identification:

- Press ⇒ key.

-> Indicated on display:

```
Rapid data transfer      HELP
Select function XX
```

- Press keys -0- and -8- (08 initiates the "Read measured value block" function).

-> Indicated on display:

```
Rapid data transfer      Q
08 - Read measured value block
```

- Confirm entry with the Q key.

-> Indicated on display:

```
Read measured value block      Help
Enter display group number XXX
```

The display group number 001 is an example, to illustrate the sequence.

- Press keys 0, 0 and 1 for "Display group number 1" and confirm entry with Q key.

-> Indicated on display:
(1...4 = Display zones)

```
Read measured value block      1
"
     1      2      3      4
```

satelettronica
Protected by copyright. Copying for private or commercial purposes, in part or in whole, is not permitted unless authorised by Volkswagen AG. Volkswagen AG does not guarantee or accept any liability with respect to the correctness of information in this document. Copyright by Volkswagen AG.

Note:

To change to another display group proceed as follows:

Display group	V.A.G 1551	V.A.G 1552
Higher	Press key 3	Press ↑key
Lower	Press key 1	Press ↓key
Skip	Press key C	Press key C

- Displayed after pressing C key.

-> Indicated on display:

```
Read measured value block     Help
Enter display group number XXX
```

- Now enter the display group number required.

Notes:

- The actual sender and sensor values are always shown on the display.
- Other display groups are possible but these are not required for fault finding!

4.11 - Display group overview

Break down of display content for display group number 001

Display group 001 Read measured value block 1 ⇒				◂ Indicated on display		
xxx	xxx	xxx	xxx	◂ Display zone	Specification	Evaluation
1	2	3	4	S contact on or off (Radio does not switch off)	S contact on = Display "on". S contact off = Display "off".	=> page 71
				Dimming of lights in %	Light off = "0%" Light on = "20 - 95%", according to position of lighting control for switches and instruments	
		Voltage supply in volts			approx. battery voltage	
	Road speed signal from speedometer				"1" or "0"	

Evaluating display group number 001

Display zone	Description	Display	Rectifying fault
	Road speed signal from speedometer	"1" or "0" The display must always jump back and forth between "1" and "0" when a front wheel is being turned.	- Visually check wiring Check correct location and secure fit of connectors in relevant circuit and at the same time observe the display If the display content does not change during operation, the fault should be eliminated or the affected component renewed Erase fault memory Perform functional check Interrogate fault memory again

Copying for private or commercial purposes, in part or in whole, is not permitted unless authorised by Volkswagen AG. Volkswagen AG does not guarantee or accept any liability with respect to the correctness of information in this document. Copyright by Volkswagen AG.
satelettronica

Display zone	Description	Display	Rectifying fault
2	Voltage supply in volts	Approx. battery voltage	
3	Dimming of lights in %	Light off = display "0%" Light on = infinitely variable brightness control for switches and instruments with switches and instruments lighting control, display = "20 - 95%", according to position of control.	
4	S contact on or off (Radio does not switch off)	S contact on = display "on". S contact off = display "off".	

Break down of display content for display group number 002

Display group 002 Read measured value block 2 ⇒ ◂ Indicated on display						
xxx	xxx	xxx	xxx	◂ Display zones	Specification	Evaluation
1	2	3	4	Empty1)		=> page 72
			Status input terminal 15		"Term.15 ON"	
		Empty1)				
	Status input reverse light switch				"Rev. OFF" or "Rev. ON"	

1) Empty means in this case: Display zone is blank

Evaluating display group number 002

Display zone	Description	Display	Rectifying fault
1	Status input reverse light switch	"Rev. OFF" Reverse gear not selected "Rev. ON" Reverse gear selected	- Visually check wiring Check correct location and secure fit of connectors in relevant circuit and at the same time observe the display If the display content does not change during operation, the fault should be eliminated or the affected component renewed Perform functional check Interrogate fault memory again
2	None	Empty1)	
3	Status input terminal 15	"Term.15 ON" if term.15 fitted to RNS "Term.15 OFF" if ignition on, but term. 15 not fitted to RNS => Rectifying fault	

Protected by copyright. Copying for private or commercial purposes, in part or in whole, is not permitted unless authorised by Volkswagen AG. Volkswagen AG does not guarantee or accept any liability with respect to the correctness of information in this document. Copyright by Volkswagen AG.
satelettronica

Display zone	Description	Display	Rectifying fault
4	None	Empty1)	

1) Empty means in this case: Display zone is blank

Break down of display content for display group number 003

Display group 003						
Read measured value block 3			⇒	◂ Indicated on display		
xxx	xxx	xxx	xxx			
1	2	3	4	◂ Display zones	Specification	Evaluation
				Empty1)		=> page 73
			Empty1)			
		OK or not OK.			"OK"	
	Status voltage supply GPS receiver				"GPS-Aer."	

1) Empty means in this case: Display zone is blank

Evaluating display group number 003

Display zone	Description	Display	Rectifying fault
1	Status voltage supply GPS receiver	"GPS-Aer."	- Visually check wiring Check correct location and secure fit of connectors in relevant circuit and at the same time observe the display If the display content does not change during operation, the fault should be eliminated or the affected component renewed Perform functional check Interrogate fault memory again
2	Voltage supply OK or not OK.	"OK" or "not OK"	
3	None	Empty1)	
4	None	Empty1)	

1) Empty means in this case: Display zone is blank

Break down of display content for display group number 004

Display group 004						
Read measured value block 4			⇒	◂ Indicated on display		
xxx	xxx	xxx	xxx			
1	2	3	4	◂ Display zones	Specification	Evaluation
				Empty1)		=> page 74
			Empty 1)			
		Status of communication to second display in dash panel insert 2)			"OK"	

Protected by copyright. Copying for private or commercial purposes, in part or in whole, is not permitted unless authorised by Volkswagen AG. Volkswagen AG does not guarantee or accept any liability with respect to the correctness of information in this document. Copyright by Volkswagen AG.
satelettronica

Second display in dash panel insert 2)	"ext. Displ."	

1) Empty means in this case: Display zone is blank

2) On vehicles with second display in dash panel insert only

Evaluating display group number 004

Display zone	Description	Display	Rectifying fault
1	Second display in dash panel insert 2)	"ext. Displ."	- Visually check wiring Check correct location and secure fit of connectors in relevant circuit and at the same time observe the display If the display content does not change during operation, the fault should be eliminated or the affected component renewed Perform functional check Interrogate fault memory again
2	Status of communication to second display in dash panel insert 2)	"OK" or "not OK"	
3	None	Empty1)	
4	None	Empty1)	

1) Empty means in this case: Display zone is blank

2) On vehicles with second display in dash panel insert only

Break down of display content for display group number 005

Display group 005						
Read measured value block 5 =>				◂ Indicated on display		
xxx	xxx	xxx	xxx	◂ Display zones	Specification	Evaluation
1	2	3	4	Telephone message from telephone control unit 2)	"1 or 0"	=> page 74
				TMC box message from traffic information control unit 1)	"1 or 0"	
		OK or not OK			"OK"	
	Data bus communication				"Data bus"	

1) Only on vehicles with RNS with traffic information control unit

2) On vehicles with telephone control unit only

Evaluating display group number 005

Display zone	Description	Display	Rectifying fault
1	Data bus communication	"Data bus"	- Check if respective component is installed (concerns TMC box or GSM telephone) Visually check wiring Check correct location and secure fit of connectors in relevant circuit and at the same time observe the display

Protected by copyright. Copying for private or commercial purposes, in part or in whole, is not permitted unless authorised by Volkswagen AG. Volkswagen AG does not guarantee or accept any liability with respect to the correctness of information. Copyright by Volkswagen AG.
satelettronica

Display zone	Description	Display	Rectifying fault
2	Data bus communication OK or not OK.	"OK" or "not OK"	- If the display content does not change during operation, the fault should be eliminated or the affected component renewed Perform functional check Interrogate fault memory again
3	TMC box message from control unit1) received not received	"0" "1"	
4	Telephone message from telephone control unit 2) received not received	"0" "1"	

1) On vehicles with RNS with traffic information control unit only

2) On vehicles with telephone control unit only

Break down of display content for display group number 006

Display group 006 Read measured value block 6 ⇒				◂ Indicated on display		
xxx	xxx	xxx	xxx			
1	2	3	4	◂ Display zones	Specification	Evaluation
				Speed right in km/h 1)	"...km/h"	=> page 75
				Impulse sender right 1)	"right"	
				Speed left in km/h	"...km/h"	
				Impulse sender left	"left"	

1) The right wheel speed display is discontinued on newer RNS models

Evaluating display group number 006

Display zone	Description	Display	Rectifying fault
1	Road speed signal from ABS control unit from impulse sender left	"Left"	- Visually check wiring Check correct location and secure fit of connectors in relevant circuit and at the same time observe the display If the display content does not change during operation, the fault should be eliminated or the affected component renewed Perform functional check Interrogate fault memory again
2	Road speed signal from ABS control unit from impulse sender left in kilometres per hour.	"... km/h" Display of road speed dependent on how fast left wheel is currently turning.	
3	Road speed signal from ABS control unit from impulse sender right.	"Right"	
4	Road speed signal from ABS control unit from impulse sender left in kilometres per hour.	"0 km/h" Display of road speed discontinued	

Protected by copyright. Copying for private or commercial purposes, in part or whole, is not permitted unless authorised by Volkswagen AG. Volkswagen AG does not guarantee or accept any liability with respect to the correctness of information in this document. Copyright by Volkswagen AG.
satelettronica

If the displayed values in all display zones are OK:

- Press ⇒key.

Note:

After completing the function "Read measured value block" interrogate fault memory => Page 65 .

Ending output

- Press keys 0 and 6. (The function "End output" is selected with 06.)

-> Indicated on display:

```
Rapid data transfer     Q
06 End output
```

- Confirm entry with key Q.

-> Indicated on display:

```
Rapid data transfer     Help
Enter address word XX
```

- Switch off ignition.
- Disconnect fault reader V.A.G 1551.

4.12 - Adaption

The navigation system uses the speed signal (GALA) of dash panel insert to calculate distance.

Using the function adaption the following settings can be stored:

- A specification for tyre circumference
- The distance impulse number (K number).

The individual functions are called up using the relevant adaption channel number (see adaption table).

Note:

Adaption of traffic information control unit on new units done via coding of navigation system => Coding navigation system => page 37 .

The radio/navigation system uses the speed signal (GALA) from dash panel insert to calculated distance.

Using the function adaption the following settings can be stored:

- A specification for tyre circumference
- The distance impulse number (K number).

The individual functions are called up using the relevant adaption channel number (see adaption table).

Adaption table:

Adaption channel	Adaption functions
01	Specification for tyre circumference: 1000
02	Distance impulse number

Protected by copyright. Copyright by Volkswagen AG. Copying for private or commercial purposes, in part or in whole, is not permitted unless authorised by Volkswagen AG. Volkswagen AG does not guarantee or accept any liability with respect to the correctness of information in this document.
satelettronica

Note:

After changing an adaption value or ending an adaption channel the function "10 - Adaption" must be performed to select another adaption channel!

Adapting radio/navigation system

Note:

Adaption of traffic information control unit on new units done via coding of navigation system => Coding navigation system => page 37 .

Note:

The adaption has to be performed in order to function with a high degree of accuracy immediately on completion of the work.

If the system is not adapted and a test drive is not performed before the vehicle is delivered to the customer then when the system is switched on the first 12-15 km will give no or imprecise instructions.

- Connect fault reader V.A.G 1551, select operating mode 1 "Rapid data transfer", switch on ignition and enter address word 37 "Navigation".
- Press ⇒ key.

-> Indicated on display:

```
Rapid data transfer      HELP
Select function XX
```

- Press keys 1 and 0. (10 selects the "Adaption" function.)

-> Indicated on display:

```
Rapid data transfer      Q
10 - Adaption
```

- Confirm entry with key Q.

-> Indicated on display:

```
Adaption
Enter channel number XX
```

- Press keys 0 and 1. ("channel 1" is selected with 01.)

Note:

◆ An incorrect entry can be corrected by pressing the C key.

- Confirm entry with key Q.

-> Indicated on display:

```
Channel 1     Adaption     1000
```

The selected channel and stored value for the tyre circumference are displayed in the top line.

The specification must always be 1000.

If another value is displayed this value must be changed to read 1000.

- Press ⇒ key.

-> Indicated on display:

Protected by copyright. Copyright by Volkswagen AG. Volkswagen AG does not guarantee or accept any liability with respect to the correctness of information in this document. Copying for commercial purposes, in part or in whole, is not permitted without the authorised by Volkswagen AG.
satelettronica

```
Channel 1     Adaption     1930
Enter adaption value XXXXX
```

- Enter 1000, when doing this place a 0 before the 4 digit number (01000).
- Confirm entry with key Q.

-> Indicated on display:

```
Channel 1     Adaption     1000     Q
```

- Confirm entry with key Q.

-> Indicated on display:

```
Channel 1     Adaption     1000     Q
Store amended value?
```

- Confirm entry with key Q.

-> Indicated on display:

```
Channel 1     Adaption     1000
Amended value is stored
```

- Press ⇒ key.

-> Indicated on display:

```
Rapid data transfer     HELP
Select function XX
```

- Press keys 0 and 6. (06 selects the "End output" function.)

Determine distance impulse number (K number) for dash panel insert from following table:

Engine capacity and output	Engine code	Distance impulse number
1.4 ltr. TDI 55 KW	AMF	4017
1.6 ltr., 92 KW	ARC	3862
1.4 ltr., 74 KW	AUB	3862
1.4 ltr., 74 KW	AFK	3862
All others	All others	3956

- Connect fault reader V.A.G 1551, select operating mode 1 "Rapid data transfer", switch on ignition and enter address word 37 "Navigation".
- Press ⇒ key.

-> Indicated on display:

```
Rapid data transfer     HELP
Select function XX
```

- Press keys 1 and 0. (10 selects the "Adaption" function.)

-> Indicated on display:

```
Rapid data transfer     Q
10 - Adaption
```

- Confirm entry with key Q.

-> Indicated on display:

```
Adaption
Enter channel number XX
```

satelettronica

- Press keys 0 and 2. ("channel 2" is selected with 02.)

Note:

◆ An incorrect entry can be corrected by pressing the C key.

- Confirm entry with key Q.

-> Indicated on display:

```
Channel 2      Adaption      3160
```

The selected channel and stored distance impulse number are displayed in the top line.

- Press ⇒ key.

-> Indicated on display:

```
Channel 2      Adaption      3160
Enter adaption value XXXXX
```

- Enter the distance impulse number determined from table, and enter a 0 before the 4 digit number (e.g. 03956) when doing this.
- Confirm entry with key Q.

-> Indicated on display:

```
Channel 2      Adaption      3956      Q
```

- Confirm entry with key Q.

-> Indicated on display:

```
Channel 2      Adaption      3956      Q
Store amended value?
```

- Confirm entry with key Q.

-> Indicated on display:

```
Channel 2      Adaption      3956
Amended value is stored
```

- Press ⇒ key.
- Press keys 0 and 6. (06 selects the "End output" function.)

Protected by copyright. Copying for private or commercial purposes, in part or in whole, is not permitted unless authorised by Volkswagen AG. Volkswagen AG does not guarantee or accept any liability with respect to the correctness of information in this document. Copyright by Volkswagen AG.
satelettronica

91 - Radio, telephone, navigation

1 - Radio systems

1.1 - Radio systems

1.2 - Radio systems > 09.99

Before beginning repair work, perform the following steps:

- Switch off all electrical consumers.
- Switch off ignition.
- Pull out ignition key.

Notes:

- When faced with complaints it is absolutely necessary to know the functions and how to operate the radio system.
- Additional information

=> Instruction manual

- When retrofitting, repairing or fault finding

=> Current flow diagrams, Electrical fault finding and Fitting locations

=> Fitting instructions

- Generally, only radio sets and parts from the Volkswagen and Audi programme (Votex) should be used. Only then can trouble-free fitting and optimal reception be guaranteed.

1.3 - Radio system "alpha" > 09.99

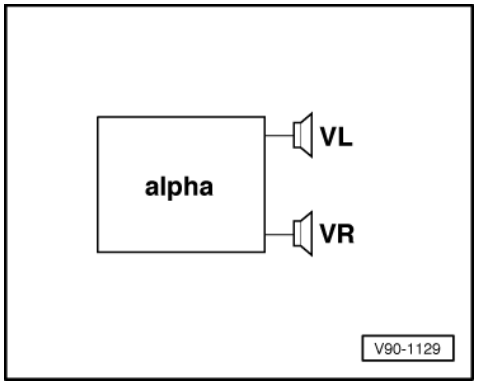

Note:

Front loudspeaker system - passive

Wide band loudspeakers front right and left

- Fitted in dash panel

Volkswagen AG. Volkswagen AG does not ... or accept any liability with respect to the correctness of information in this document. Copyright by Volkswagen AG. Protected by copyright. Copying for private or commercial purposes, in part or in whole, is not permitted unless aut...
satelettronica

- Diameter 100 mm

1.4 - Radio system "beta" > 09.99

Note:

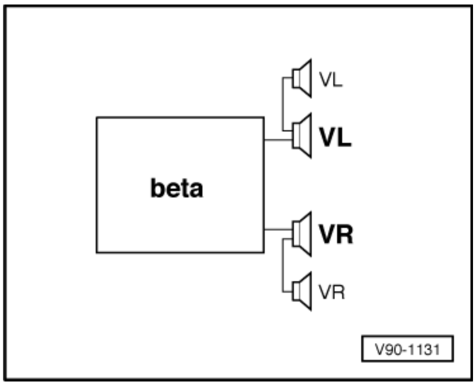

Front loudspeaker system - passive

Bass loudspeakers front right and left

- Fitted in door tray
- Diameter 168 mm

Treble loudspeakers front right and left

- Fitted in dash panel
- Dome treble loudspeakers 100 mm diameter on a base plate.

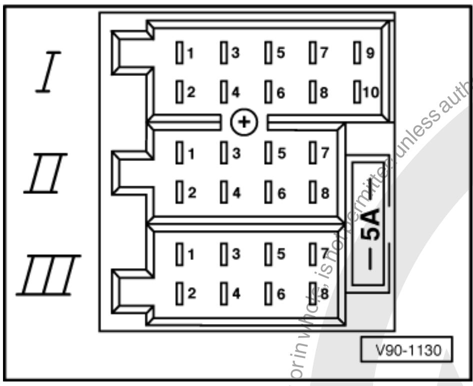

-> Contact assignment of the multi-pin connectors I, II, III on the rear of the radio

Multi-pin connector I, -T10-, 10-pin, red

only connected in "gamma" radio

Multi-pin connector II, -T8a-, 8-pin, brown

3 - Loudspeaker + front right
4 - Loudspeaker - front right
5 - Loudspeaker + front left
6 - Loudspeaker - front left

Protected by copyright. Copying for private or commercial purposes, in part or in whole, is not permitted unless authorised by Volkswagen AG. Volkswagen AG does not guarantee or accept any liability with respect to the correctness of information in this document. Copyright by Volkswagen AG.

satelettronica

Protected by copyright. Copying for private or commercial purposes, in part or in whole, is not permitted unless authorised by Volkswagen AG. Volkswagen AG does not guarantee or accept any liability with respect to the correctness of information in this document. Copyright by Volkswagen AG.

satelettronica

Multi-pin connector III, -T8-, 8-pin, black

2 - Muting (telephone operation)
4 - Connection for ignition key controlled switching on and off (S contact)
5 - Switched positive for aerial booster
6 - Lighting (terminal 58b)
7 - Battery + (terminal 30)
8 - Battery - (terminal 31)

1.5 - Removing and installing radio > 09.99

Note:

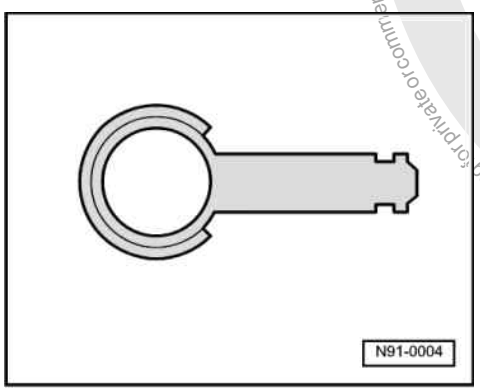

Before removing the radio obtain the code number from the customer. If the radio is replaced, always activate the anti-theft coding =>Page 83 . The customer must be informed of the new code number.

Removing:

-> To remove radios the radio release tool 3316 is required.

The radio release tool 3316 consists of two identical parts.

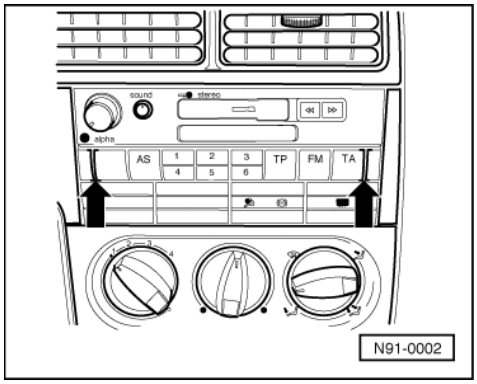

- -> Slide radio release tool 3316 into the release slots -arrows- until they locate.

Notes:

- When doing this the radio release tool 3316 must not be pushed to the side or tilted.
- To remove the release tools from the radio the locating lugs on the side of the radio must be pressed inwards.

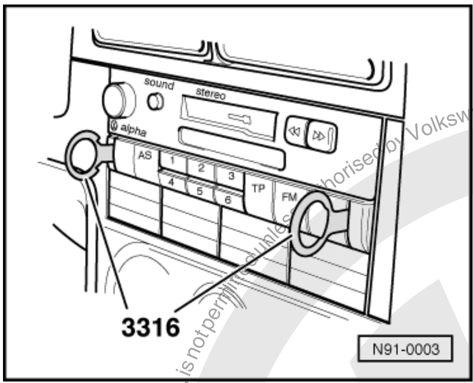

- -> Pull radio out of the dash panel using the grip rings of the release tools.

Installing:

- Fit connector to radio.
- Slide radio level into the dash panel until it locates in the assembly frame.

1.6 - Activating radio anti-theft coding > 09.99

The radio units are supplied with a fixed code. "Fixed code" means that each radio unit with an anti-theft coding is programmed with its own code number. This fixed code is not activated by the factory.

The security coding of the ready to play radio is not activated until the fixed code is entered. The fixed code is to be activated as follows:

- Switch radio unit on.
- Press buttons TP and TA simultaneously until "1000" appears in the display. Release buttons.
- With the help of station buttons 1 to 4 enter code number printed on radio card. Use button 1 to input the first digit of the code number, button 2 to input the 2nd digit and so on.
- Then press buttons TP and TA simultaneously again and hold down until "SAFE" appears on the frequency display. Release buttons. Soon afterwards a frequency will automatically appear.

If the fixed code number has been entered correctly into the radio unit, when the ignition key is removed the diode located next to the unit name will blink. If the diode blinks the radio is ready for operation and the anti-theft coding is activated.

1.7 - Radio systems 10.99 >

Before beginning repair work, perform the following steps:

- Switch off all electrical consumers.
- Switch off ignition.
- Pull out ignition key.

This chapter includes information concerning the radio systems "ALPHA", "BETA" and "GAMMA".

Notes:

- When faced with complaints it is absolutely necessary to know the functions and how to operate the radio system.
- The electronic anti-theft coding has a permanent code.

=> Operating instructions

=> Special information, Electrics

Protected by copyright. Copying for private or commercial purposes, in part or in whole, is not permitted unless authorised by Volkswagen AG. Volkswagen AG does not guarantee or accept any liability with respect to the correctness of information in this document. Copyright by Volkswagen AG.

satelettronica

- Generally, only radio sets and parts from the Volkswagen and Audi programme (Votex) should be used. Only then can trouble-free fitting and optimal reception be guaranteed.
- When retrofitting, repairing or fault finding

=> Current flow diagrams, Electrical fault finding and Fitting locations

1.8 - Radio system "ALPHA" 10.99 >

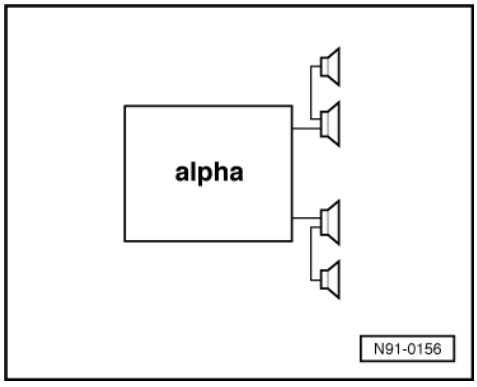

-> The radio system "ALPHA" comprises of the radio unit and loudspeakers in the front doors.
There is a bass loudspeaker fitted, with a diameter of 168 mm, in each of the front doors.
Apart from this there is a domed treble loudspeaker installed in the mirror triangle above the door trim.
Of course the roof aerial also belongs to this system => Page 98 .

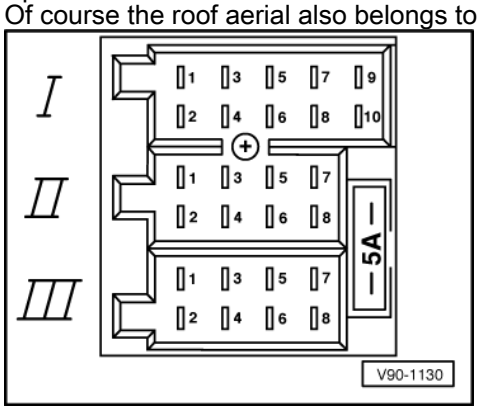

-> Contact assignment of the multi-pin connectors I, II, III on the rear of the radio
Multi-pin connector I, -T10-, 10-pin, red
This connector is not used.
Multi-pin connector II, -T8a-, 8-pin, brown

3 - Loudspeaker + front right
4 - Loudspeaker - front right
5 - Loudspeaker + front left
6 - Loudspeaker - front left

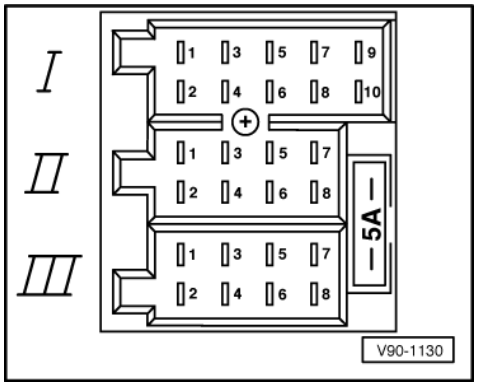

satelettronica
Protected by copyright. Copying for private or commercial purposes, in part or in whole, is not permitted unless authorised by Volkswagen AG. Volkswagen AG does not guarantee or accept any liability with respect to the correctness of information in this document. Copyright by Volkswagen AG.

-> Multi-pin connector III, -T8-, 8-pin, black

2 - Muting (telephone operation)
4 - Connection for ignition key controlled switching on and off (S contact)
5 - Vacant
6 - Lighting (terminal 58b)
7 - Battery + (terminal 30)
8 - Battery - (terminal 31)

1.9 - Radio system "BETA" 10.99 >

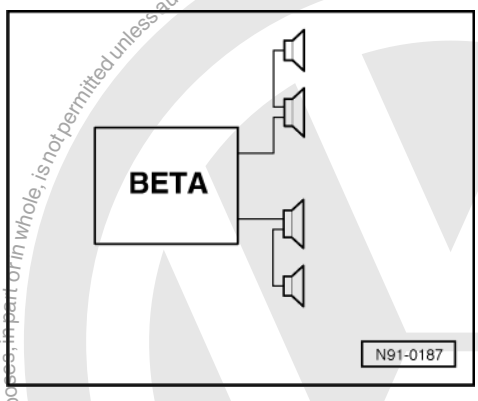

-> The radio system "BETA" comprises a radio unit and loudspeakers in the front doors.
There is a bass loudspeaker fitted, with a diameter of 168 mm, in each of the front doors.
Apart from this there is a domed treble loudspeaker installed in the mirror triangle above the door trim.
Of course the roof aerial also belongs to this system => Page 98 .

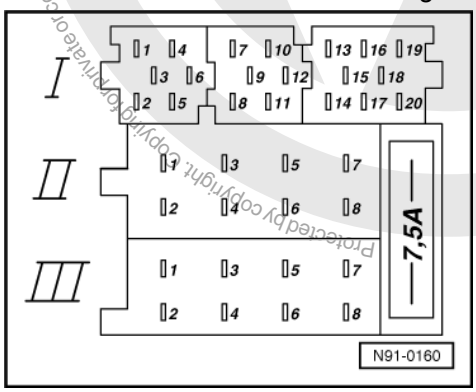

Contact assignment of the multi-pin connectors I, II, III on the rear of the radio

Multi-pin connector I, -T20- consists of 3 parts that are marked with different colours:

-> Multi-pin connector I, part 1, yellow

This connector is not used.

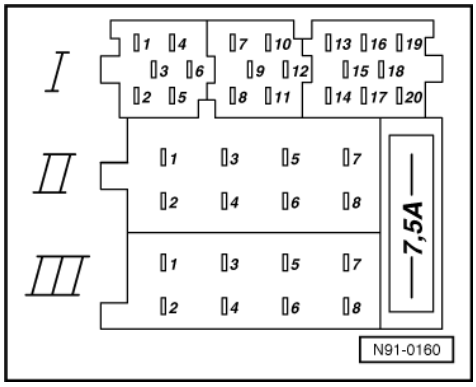

Protected by copyright. Copyright by Volkswagen AG. Volkswagen AG does not guarantee or accept any liability with respect to the correctness of information in this document. Copyright by Volkswagen AG.
satelettronica

-> Multi-pin connector I, part 2, green

7 - Telephone input signal, TEL+
11 - Remote control, REM
12 - Telephone input signal, TEL-

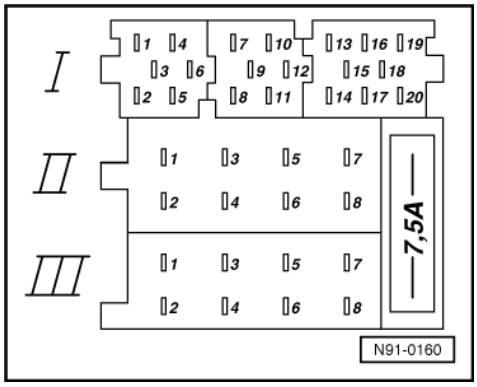

-> Multi-pin connector I, part 3, blue

13 - CD changer, DATA IN
14 - CD changer, DATA OUT
15 - CD changer, CLOCK
16 - CD changer, terminal 30 voltage supply (+)
17 - CD changer, control signal
18 - CD changer, left and right channel, earth
19 - CD changer, left channel, CD/L
20 - CD changer, right channel, CD/R

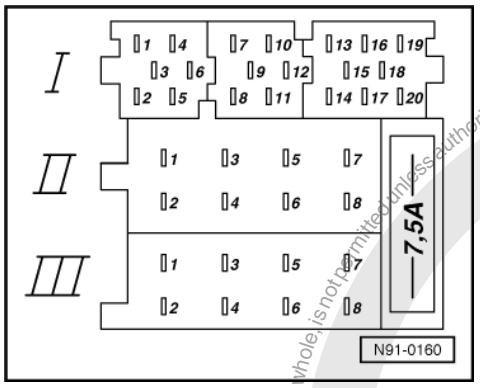

-> Multi-pin connector II, -T8a-, 8-pin, brown

3 - Loudspeaker + front right
4 - Loudspeaker - front right
5 - Loudspeaker + front left
6 - Loudspeaker - front left

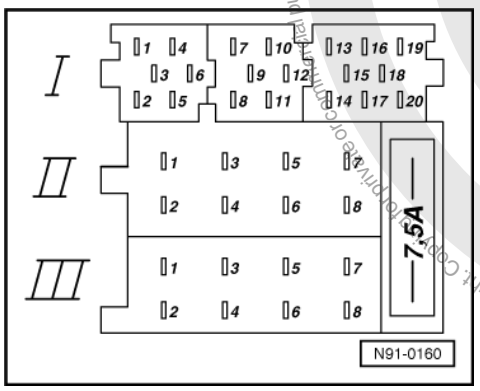

Protected by copyright. Copying for private or commercial purposes, in part or in whole, is not permitted unless authorised by Volkswagen AG. Volkswagen AG does not guarantee or accept any liability with respect to the correctness of information in this document. Copyright by Volkswagen AG.
satelettronica

Protected by copyright. Copying for private or commercial purposes, in part or in whole, is not permitted unless authorised by Volkswagen AG. Volkswagen AG does not guarantee or accept any liability with respect to the correctness of information in this document. Copyright by Volkswagen AG.

-> Multi-pin connector III, -T8-, 8-pin, black

1 - Gala (volume adaption)
2 - Telephone mute circuit
3 - Self-diagnosis/K wire
4 - Connection for ignition key controlled switching on and off (S contact)
5 - Anti-theft system control signal, SAFE (terminal 30)
6 - Illumination (terminal 58b)
7 - Battery + (terminal 30)
8 - Battery - (terminal 31)

1.10 - Radio system "GAMMA" 10.99 >

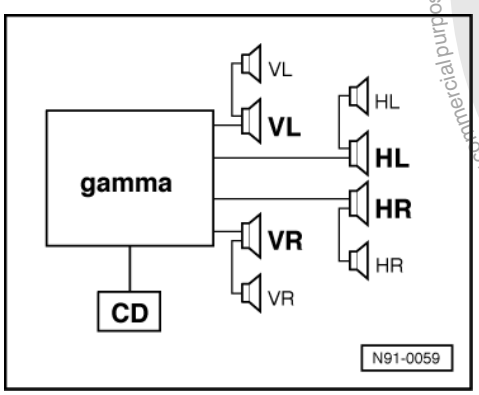

-> The radio system "GAMMA" consists of a radio unit and loudspeakers in the front and rear doors. A CD changer is also possible, =>Page 90 .

There is a bass loudspeaker fitted, with a diameter of 168 mm, in each of the front and rear doors.

Apart from this there is a domed treble loudspeaker installed in the front doors above the door trim.

In the rear doors a domed treble loudspeaker is integrated into the door release cover.

Of course the roof aerial also belongs to this system => Page 98 .

Contact assignment of the multi-pin connectors I, II, III on the rear of the radio

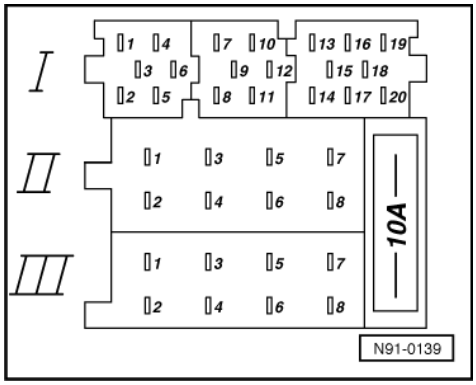

Multi-pin connector I, -T20- consists of 3 parts that are marked with different colours:

-> Multi-pin connector I, part 1, yellow

1 - Line Out rear left, LR
2 - Line Out rear right, RR
3 - Line Out, earth
4 - Line Out front left, LF
5 - Line Out front right, RF

satelettronica

6 - Switched positive for sound amplifier

Multi-pin connector I, part 2, green

7 - Telephone input signal, TEL+
8 - Second display, CLOCK
9 - Second display, DATA
10 - Second display, ENA
11 - Remote control, REM
12 - Telephone input signal, TEL-

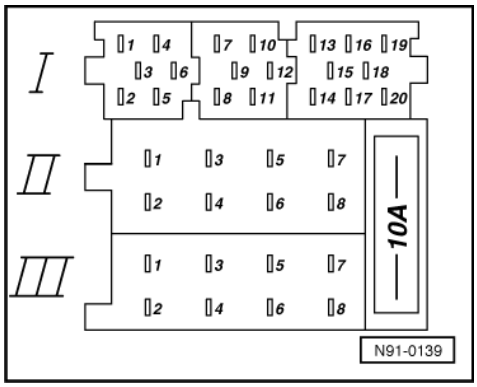

-> Multi-pin connector I, part 3, blue

13 - CD changer, DATA IN
14 - CD changer, DATA OUT
15 - CD changer, CLOCK
16 - CD changer, terminal 30 voltage supply (+)
17 - CD changer, control signal
18 - CD changer, left and right channel, earth
19 - CD changer, left channel, CD/L
20 - CD changer, right channel, CD/R

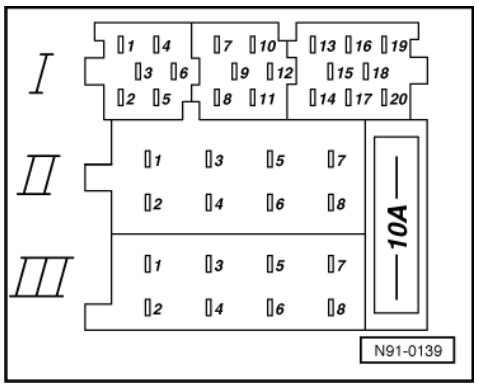

-> Multi-pin connector II, -T8a-, 8-pin, brown

1 - Loudspeaker + rear right
2 - Loudspeaker - rear right
3 - Loudspeaker + front right
4 - Loudspeaker - front right
5 - Loudspeaker + front left
6 - Loudspeaker - front left
7 - Loudspeaker + rear left
8 - Loudspeaker - rear left

Protected by copyright. Copying for private or commercial purposes, in part or in whole, is not permitted unless authorised by Volkswagen AG. Volkswagen AG does not guarantee or accept any liability with respect to the correctness of information in this document. Copyright by Volkswagen AG.
satelettronica

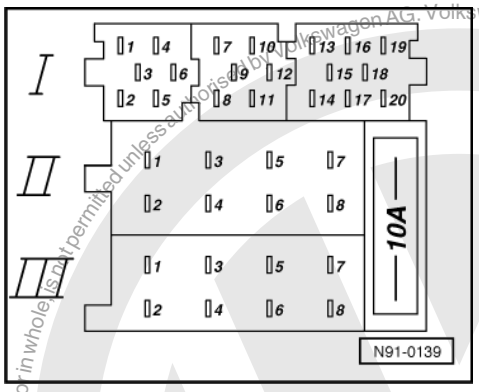

-> Multi-pin connector III, -T8-, 8-pin, black

1 - Gala (volume adaption)
2 - Telephone mute circuit
3 - Self-diagnosis/K wire
4 - Connection for ignition key controlled switching on and off (SU contact)
5 - Anti-theft system control signal, SAFE (terminal 30)
6 - Illumination (terminal 58b)
7 - Battery + (terminal 30)
8 - Battery - (terminal 31)

1.11 - Removing and installing radio 10.99 >

Note:

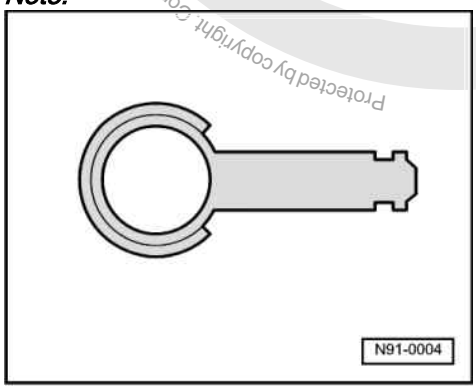

Obtain the radio unit code number from the customer before removing the radio. If the radio unit is replaced, always activate the anti-theft coding. Radio "ALPHA" =>Page 94 . The customer must be informed of the new code number.

Special tools, testers, measuring units and auxiliary items required

- 3316 Releasing tool

The radio release tool 3316 consists of two identical parts.

Removing:

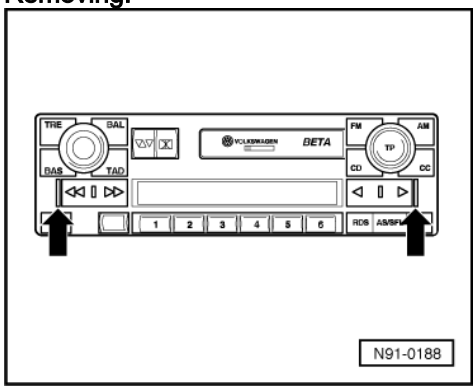

Protected by copyright. Copyright by Volkswagen AG. Volkswagen AG does not guarantee or accept any liability with respect to the correctness of information in this document. Copyright by Volkswagen AG. Not permitted unless authorised by Volkswagen AG. Copying for private or commercial purposes, in part or in whole, is not permitted unless authorised by Volkswagen AG.
satelettronica

- -> Slide radio release tool 3316 into the release slots -arrows- until they locate.

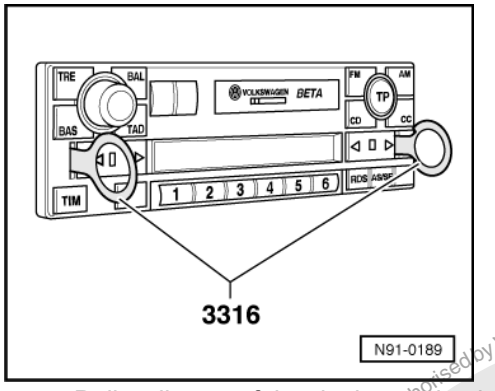

- -> Pull radio out of the dash panel using the grip rings of the release tools.

Notes:

- When doing this the radio release tool 3316 must not be pushed to the side or tilted.
- To remove the release tools from the radio the locating lugs on the side of the radio must be pressed inwards.

Installing:

- Fit connector to radio.
- Slide radio level into the dash panel until it locates in the assembly frame.
- Check the radio code and recode as necessary => page 11 for GAMMA radio.

1.12 - Removing and installing CD player 10.99 >

Notes:

- When retrofitting a CD player it can be used with "BETA" and "GAMMA" radios 10.99 ▸ (provided the relevant adapter cables are used). Operation via "ALPHA" radio is not possible.
- When retrofitting the CD player it is absolutely necessary to recode the radio functions =>Page 11 for the GAMMA radio.

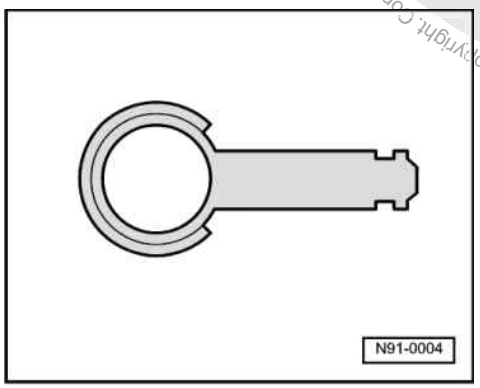

Special tools, testers, measuring units and auxiliary items required

- 3316 Releasing tool

The radio release tool 3316 consists of two identical parts.

Protected by copyright. Copying for commercial purposes, in part or in whole, is not permitted unless authorised by Volkswagen AG. Volkswagen AG does not guarantee or accept any liability with respect to the correctness of information in this document. Copyright by Volkswagen AG.
satelettronica

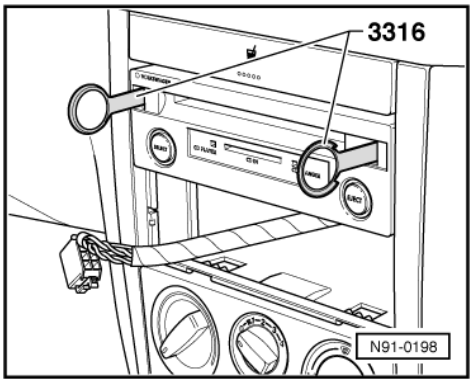

Removing:

- Before removing the CD player remove radio unit => Page 89 .
- Slide radio release tool 3316 into the release slots until they locate.
- -> Pull CD player out of the dash panel using the grip rings of the release tools.

Notes:

- When doing this the radio release tool 3316 must not be pushed to the side or tilted.
- To remove the release tools the locating lugs on the side of the CD player must be pressed inwards.

Installing:

- Connect plug to CD player.
- Slide CD player level into the dash panel, until it locates in the assembly frame.
- Connect plugs to radio.
- Slide radio level into the dash panel until it locates in the assembly frame.

Contact assignment of CD player sockets

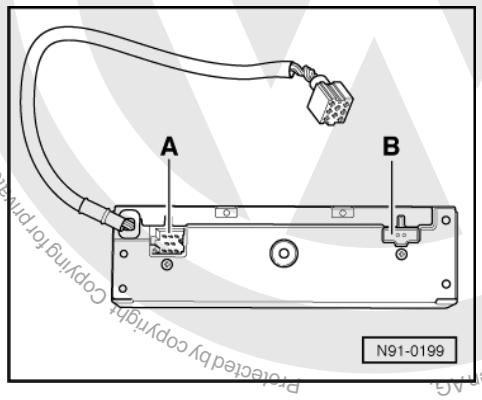

-> Multi-pin connector "A"

The multi-pin connection "A" is identical to the multi-pin connection I, part 3, blue on "BETA" radios

13 - CD changer, DATA IN
14 - CD changer, DATA OUT
15 - CD changer, CLOCK
16 - CD changer, terminal 30 voltage supply (+)
17 - CD changer, control signal
18 - CD changer, left and right channel, earth
19 - CD changer, left channel, CD/L
20 - CD changer, right channel, CD/R

satelettronica

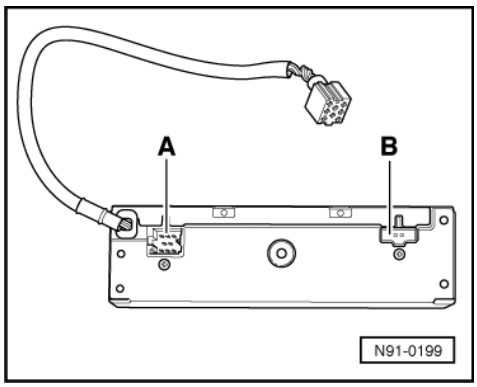

-> Multi-pin connector "B"

1 - CD player, earth, terminal 31
2 - CD player illumination, terminal 58d

1.13 - Removing and installing CD changer 10.99 >

The CD changer is located in the luggage compartment.

Removing:

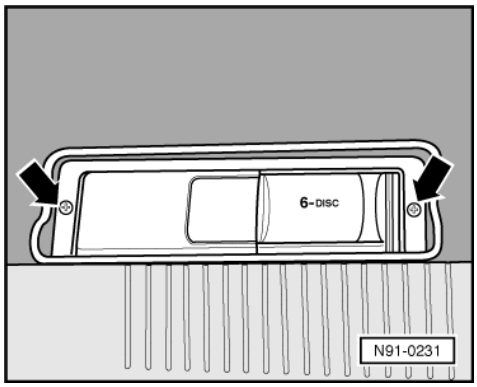

- -> Remove CD changer securing bolts -arrows- and take off cover.
- Pull CD changer out of retainer upwards.
- Pull off connector.

Installing:

Installation is carried out in the reverse sequence!

1.14 - Electronic anti-theft system for "alpha" radio 10.99 >

Functional notes

All radios are equipped with an electronic anti-theft system.

The electronic anti-theft system is activated and blocks the radio unit as soon as

- Voltage supply (terminal 30) drops below a predetermined voltage level.
- The radio part fuse blows.

Protected by copyright. Copying for private or commercial purposes, in part or in whole, is not permitted unless authorised by Volkswagen AG. Volkswagen AG does not guarantee or accept any liability with respect to the correctness of information in this document. Copyright by Volkswagen AG.
satelettronica

- The radio unit is disconnected from voltage supply (terminal 30) (e.g. when removing radio unit).

and of course,

- The vehicle battery (terminal 30) has been disconnected in order that work on the vehicle can be carried out.

A radio unit which has been blocked by the electronic anti-theft system, is shown when "SAFE" appears in the display when the unit is switched on.

Activating electronic anti-theft system for "ALPHA" radio

On new radio units the anti-theft coding is initially activated by entering the code number.

Restoring the functions on a blocked (locked) radio is only possible if the correct code number for the electronic anti-theft system is entered.

Notes:

- The code number for the electronic anti-theft system along with the unit number are stuck on the radio card. => Operating instructions
- For reasons of security the radio card should not be kept in the vehicle. Obtain radio code from customer.
- If a radio is renewed, the code number for the replacement unit must be used.
- The customer must be informed that the code number has changed.

- Obtain code number of unit
- Switch radio unit on.
- Press buttons TP and TA simultaneously until "1000" appears in the display. Release buttons.
- With the help of station buttons 1 to 4 enter code number printed on radio card. Use button 1 to input the first digit of the code number, button 2 to input the 2nd digit and so on.
- Then press buttons TP and TA simultaneously again and hold down until "SAFE" appears on the frequency display. Release buttons, shortly afterwards a frequency will automatically appear.

If the code number has been entered correctly into the radio unit, when the ignition key is removed the diode located next to the unit name will flash. If the diode flashes the radio is ready for operation and the electronic anti-theft coding is activated.

1.15 - Electronic anti-theft system for "BETA" and "GAMMA" radios 10.99 >

The radio is equipped with an electronic convenience anti-theft system which is used in conjunction with the dash panel insert.

After disconnecting the radio voltage supply, the radio operation is restored when reconnecting the voltage supply without entering the code number.
The prerequisites are that the initial activation of the electronic anti-theft system has been performed and the radio is located in the same vehicle.

Functional notes

After the initial activation of the electronic anti-theft system, a code number is stored in the radio unit and the vehicle dash panel insert.
If the radio now is no longer supplied with voltage when work on the vehicle is being carried out (i.e. removal of the radio unit or battery), a data exchange between radio unit and dash panel insert occurs when the radio is resupplied with voltage.

The internal code numbers for the radio unit and the dash panel insert are now compared. If the codes are identical, the dash panel insert recognizes that the installed radio unit belongs to the vehicle and the radio is operational with no requirement for the anti-theft code to be re-entered.

If the radio is exchanged, the anti-theft code must be entered again.

Copyright. Copyright by Volkswagen AG. Volkswagen AG does not guarantee or accept any liability with respect to the correctness of information in this document. Copyright by Volkswagen AG. Protected by copyright. Copying for private or commercial purposes, in part or in whole, is not permitted unless authorised by Volkswagen AG.
satelettronica

=>Activating electronic anti-theft system for "BETA" and "GAMMA" radios, Page 94 .

Then after switching on the "S contact" via the ignition/starter switch, the comparison between dash panel insert and radio is started immediately.

The comparison takes approx. 5 seconds. During this period no diagnosis unit may be connected the system.

Thereafter, once the voltage supply is connected and the unit is switched on, the radio is operational in the vehicle with no requirement for the anti-theft code to be re-entered.

The electronic anti-theft system is activated and blocks the radio unit as soon as

- The radio unit is installed in another vehicle.
- The dash panel insert is changed.

A radio unit which has been blocked by the electronic anti-theft system is shown when "SAFE" and "1000" appears in the display when switching the unit on.

Activating electronic anti-theft system for "BETA" and "GAMMA" radios

On new radio units, the electronic anti-theft system is not active until the correct code number has been entered.

A blocked (locked) radio unit will only work again if the correct code number for the electronic anti-theft system is entered.

Notes:

- The code number for the electronic anti-theft system along with the unit number are displayed as a sticker on the radio card.
  => Operating instructions
- For reasons of security the radio card should not be kept in the vehicle. Obtain radio code from customer.
- If a radio is renewed, the code number for the new unit must be used.
- The customer must be informed that the code number has changed.

- Obtain code number of unit

- Switch radio unit on.

The unit automatically displays "SAFE" and then "1000". There is no need to operate any buttons.

- With the help of station buttons 1 to 4 enter code number printed on radio card. Use button 1 to input the first digit of the code number, button 2 to input the 2nd digit and so on.
- Then depress and hold the right-hand side of the radio unit left or right rocker switch until the anti-theft coding is activated. This is indicated by a short audible signal.

If the code number has been entered correctly into the radio unit, when the ignition key is removed, the diode located next to the unit name will flash. If the diode flashes the radio is ready for operation and the electronic anti-theft coding is activated.

Note:

If when initially activating the electronic anti-theft coding, the code is incorrectly entered twice, the radio will be electronically locked for 2 hours.

This electronic lock can be released for the coding procedure with the V.A.G 1551 by entering the correct code number via the "Login procedure". The procedure thereafter is as described.

It can only be carried out for the "initial" activation of the electronic anti-theft system for "BETA" and "GAMMA" radios.

satelettronica

Connecting fault reader V.A.G 1551 and selecting functions (Interrogating unit version)

Check prerequisites:

- All fuses according to current flow diagram OK.
- Supply voltage OK (at least 9.5 V).

Special tools, testers and auxiliary items required

- Fault reader V.A.G 1551
- Adapter cable V.A.G 1551/3

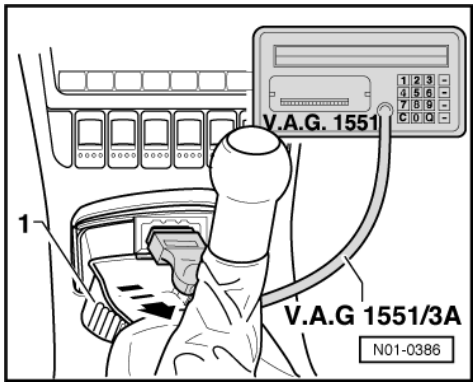

Connect fault reader using cable V.A.G 1551/3 as follows:

- -> Pull out ashtray insert -1- in direction of arrow.
- Connect cable V.A.G 1551/3 to diagnosis connector.

-> Indicated on display:

```
V.A.G - SELF DIAGNOSIS     HELP
     1 - Rapid data transfer*
     2 - Flash code output*
```

* Appears alternately

Notes:

- If the display remains blank, check V.A.G 1551 voltage supply according to current flow diagram.

=> Current flow diagrams, Electrical fault finding and Fitting locations binder

- Additional operating instructions can be called up with the fault reader HELP key.
- The ⇒ key serves to advance the programme sequence.
- In the operating mode 1 "Rapid data transfer" the function 00 "Automatic test sequence" can be carried out. Then all vehicle control units will be interrogated automatically.
- The radio unit is switched to mute during self-diagnosis.

- Switch on ignition.
- Press key 1 for "Rapid data transfer" mode.

-> Indicated on display:

```
Rapid data transfer      HELP
Input address word XX
```

- Press keys 5 and 6. "56" enters the address word "Radio".

-> Indicated on display:

```
Rapid data transfer      Q
56 Radio
```

satelettronica

- Confirm entry with Q key.

-> Indicated on display:

```
Rapid data transfer      Q
Tester sends address word 56
```

-> Indicated on display:

```
1J0035152     Radio     0001
Coding     01401     WSC     00000
```

- Press ⇒ key.

-> Indicated on display:

```
Rapid data transfer     HELP
Select function XX
```

-> Will be indicated on display:

```
Control unit does not answer!     HELP
```

- By pressing the "HELP" key a list of possible fault causes is printed out.
- After rectifying faults, enter address word 56 for radio again and confirm with Q.

-> Indicated on display:

```
1J0035152     Radio     0001
Coding     01401     WSC     00000
```

- Press ⇒ key.

-> Indicated on display:

```
Rapid data transfer     HELP
Select function XX
```

- Press key 1 twice. (11 selects the "Login procedure" function.)

-> Indicated on display:

```
Rapid data transfer     Q
11 - Login procedure
```

- Confirm entry with key Q.

-> Indicated on display:

```
Login procedure
Enter code number     XXXXX
```

Enter correct code, to do this first enter "0", then enter 4-digit code number.

-> Indicated on display e.g.:

```
Login procedure      Q
11 - Login procedure     01618
```

- Confirm entry with key Q.

-> Indicated on display:

```
Rapid data transfer     HELP
Select function XX
```

Ending output

- Press keys 0 and 6. (The function "End output" is selected with 06.)

-> Indicated on display:

Protected by copyright. Copying for private or commercial purposes, in part or in whole, is not permitted unless authorised by Volkswagen AG. Volkswagen AG does not guarantee or accept any liability with respect to the correctness of information in this document. Copyright by Volkswagen AG.
satelettronica

```
Rapid data transfer      Q
06 End output
```

- Confirm entry with key Q.

-> Indicated on display:

```
Rapid data transfer      Help
Enter address word XX
```

- Switch off ignition.
- Disconnect fault reader V.A.G 1551.
- Activate electronic anti-theft system with correct radio code =>page 94 .

2 - Aerial systems

2.1 - Aerial systems

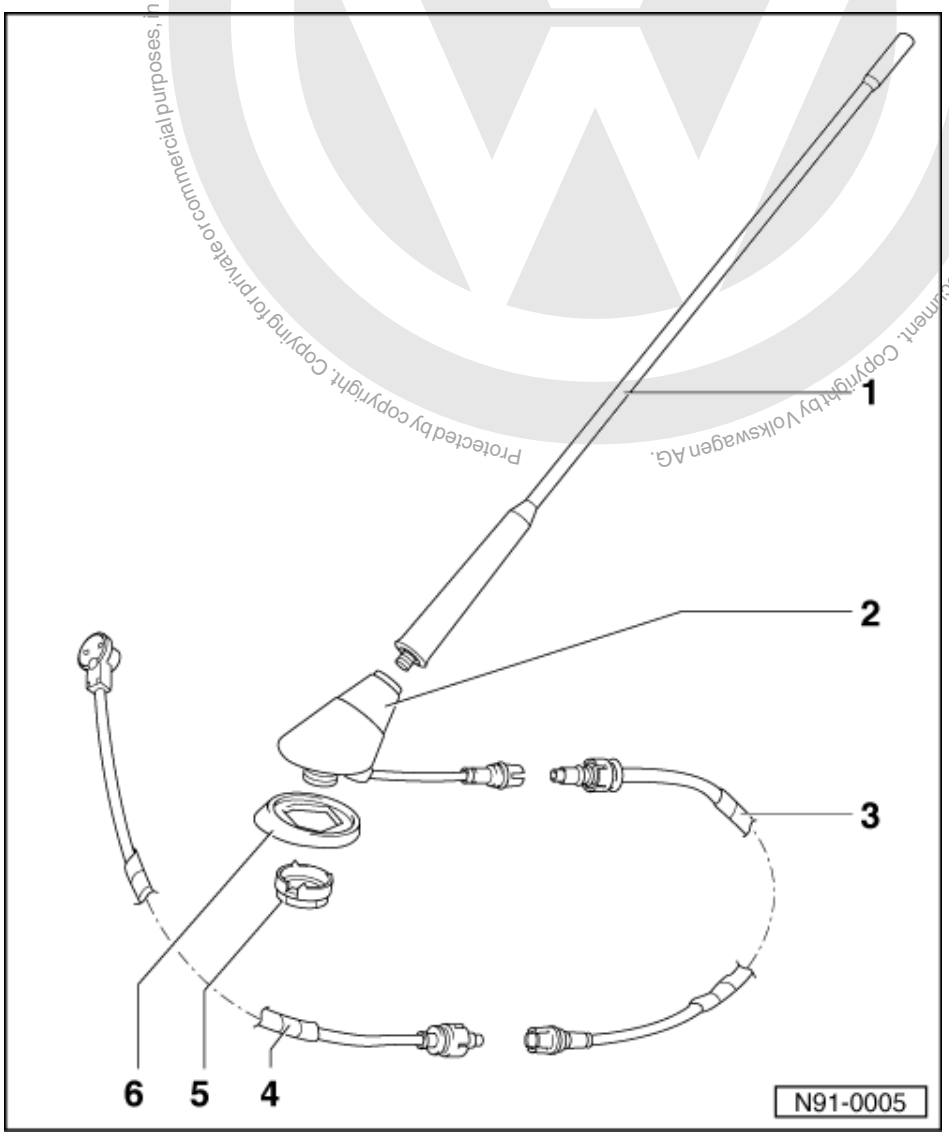

Protected by copyright. Copying for private or commercial purposes, in part or in whole, is not permitted unless authorised by Volkswagen AG. Volkswagen AG does not guarantee or accept any liability with respect to the correctness of information in this document. Copyright by Volkswagen AG.
satelettronica

2.2 - Roof aerial for radio operation -R11-, vehicles > 09.99

1 Aerial rod
2 Aerial base
- The roof aerial booster is located in the aerial base.
- Removing and installing:
  Lower moulded headlining at rear

3 Aerial cable
- From roof aerial to left lower A pillar

4 Aerial cable
- From left lower A pillar, to radio set

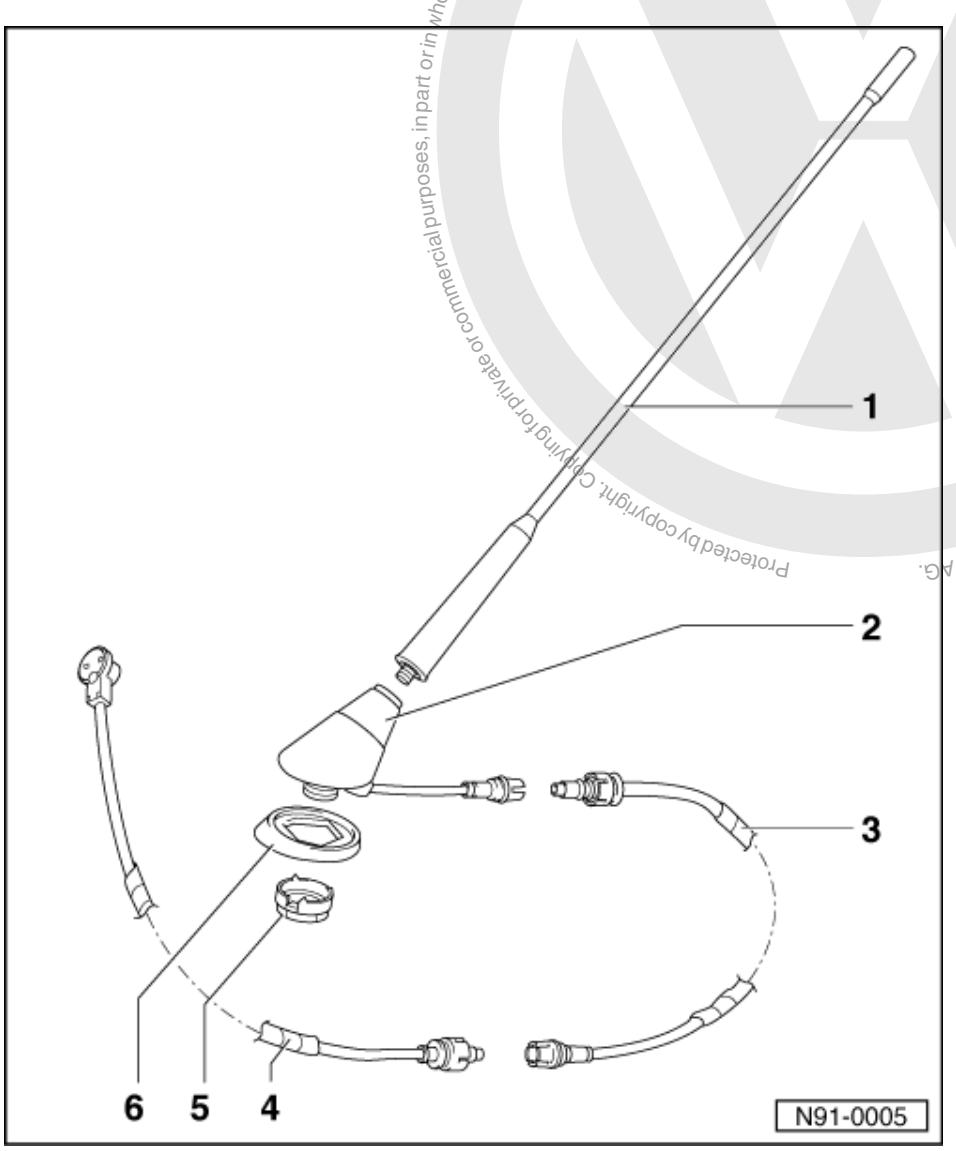

5 Hexagon nut M14 with serrated washer
- 7 Nm
- Serrated washer is attached to hexagon nut with a plastic ring.
- Apply contact grease to the inside of the roof in area of serrated washer.

6 Seal

Protected by copyright. Copying for private or commercial purposes, in part or in whole is not permitted unless authorised by Volkswagen AG. Volkswagen AG does not guarantee or accept any liability with respect to the correctness of information in this document. Copyright by Volkswagen AG.
satelettronica

2.3 - Roof aerial for radio operation -R11-, vehicles 10.99 >

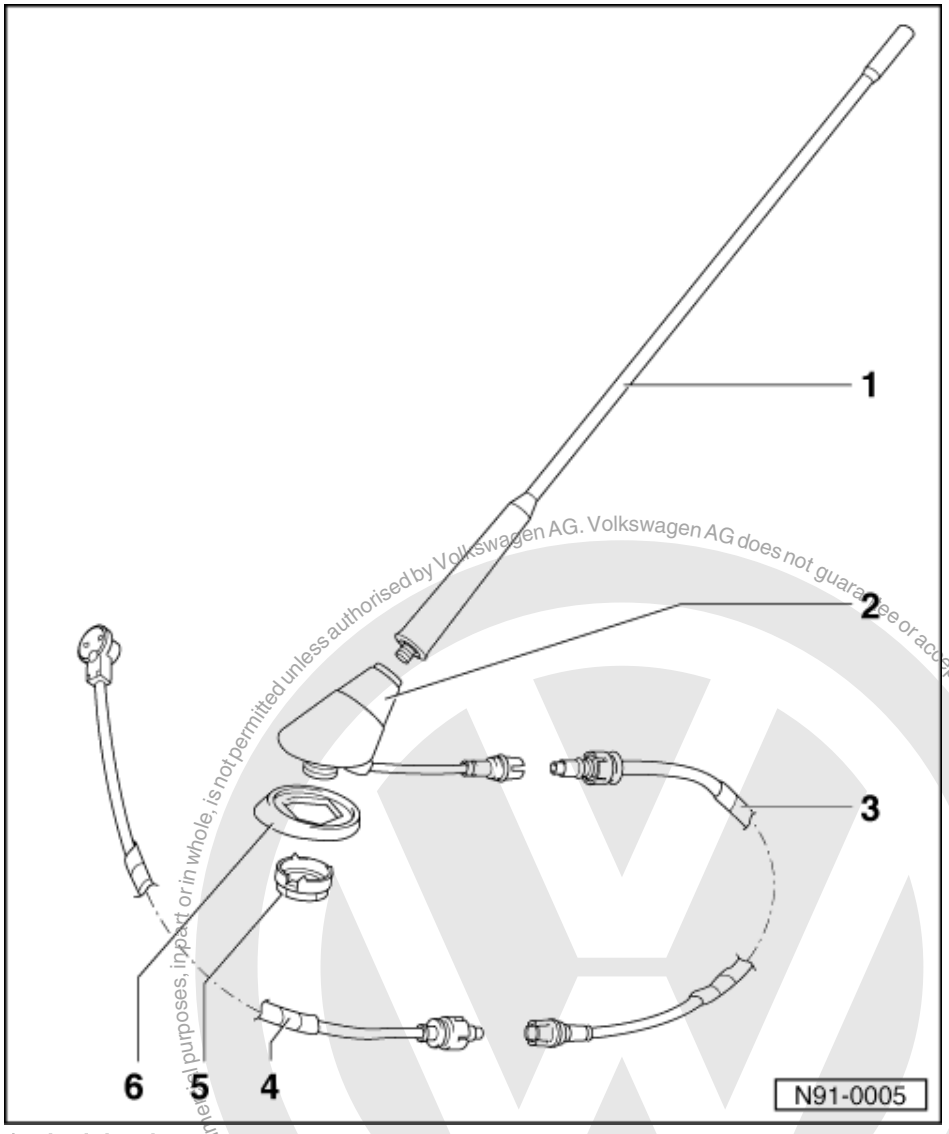

1 Aerial rod
2 Aerial base
- The roof aerial booster is located in the aerial base.
- Removing and installing, Page => 102

3 Aerial cable
- From roof aerial to front of centre console

4 Aerial cable
- From centre console to radio unit

5 Hexagon nut M14 with serrated washer
- Serrated washer is attached to hexagon nut with a plastic ring.
- Apply contact grease to the inside of the roof in area of serrated washer.

6 Seal

Protected by copyright. Copying for private or commercial purposes, in part or in whole, is not permitted unless authorised by Volkswagen AG. Volkswagen AG does not guarantee or accept any liability with respect to the correctness of information in this document. Copyright by Volkswagen AG.
satelettronica

2.4 - Roof aerial for radio, telephone and navigation system -R52- vehicles 10.99 >

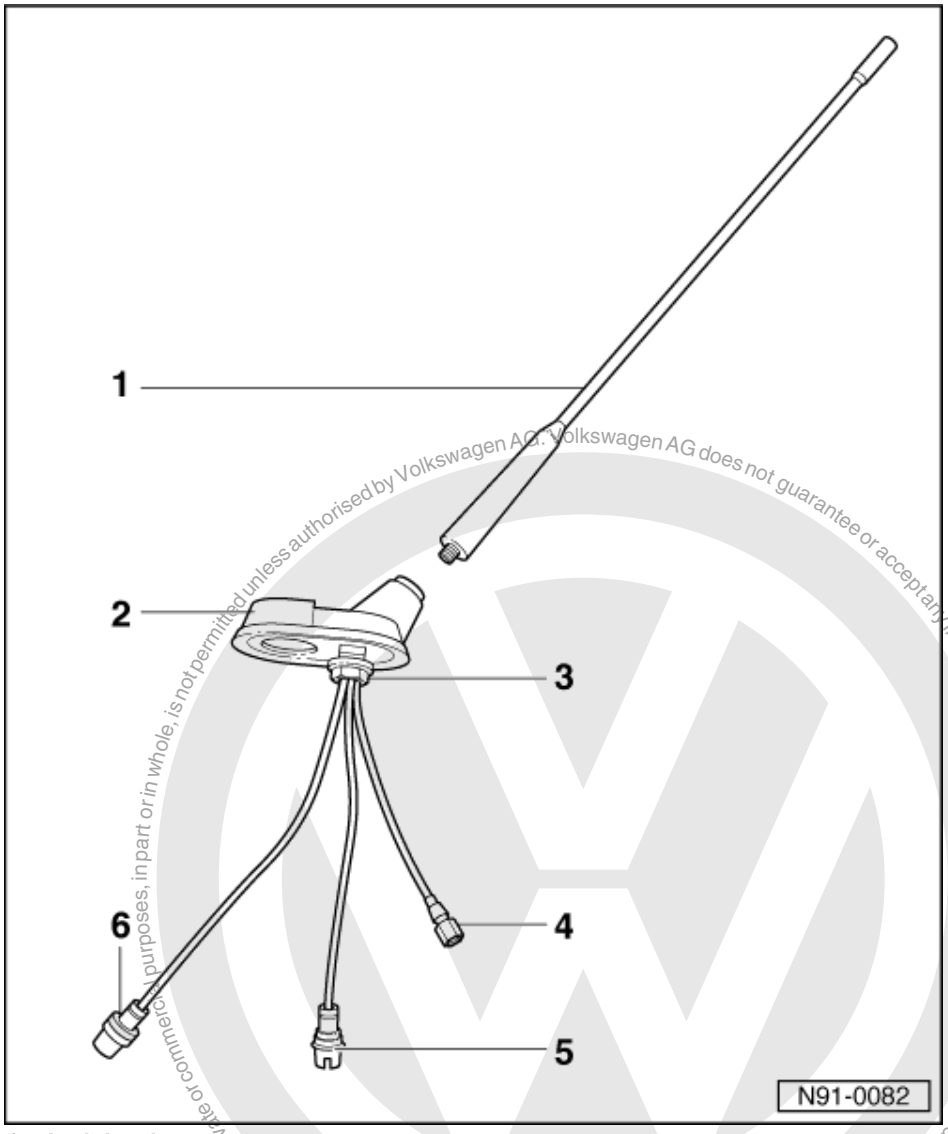

1 Aerial rod
2 Aerial base
- Two amplifiers are installed for radio and navigation systems.
- No amplifier is installed for operating a telephone.
- Removing and installing, Page => 102

3 Hexagon nut M14 with serrated washer
- Serrated washer is attached to hexagon nut with a plastic ring.
- Apply contact grease to the inside of the roof in area of serrated washer.

Copyright by Volkswagen AG. Volkswagen AG does not guarantee or accept any liability with respect to the correctness of information in this document. Copying for private or commercial purposes, in part or in whole, is not permitted unless authorised by Volkswagen AG.
satelettronica

Protected by copyright. Copying for private or commercial purposes, in part or in whole, is not permitted unless authorised by Volkswagen AG. Volkswagen AG does not guarantee or accept any liability with respect to the correctness of information in this document. Copyright by Volkswagen AG.

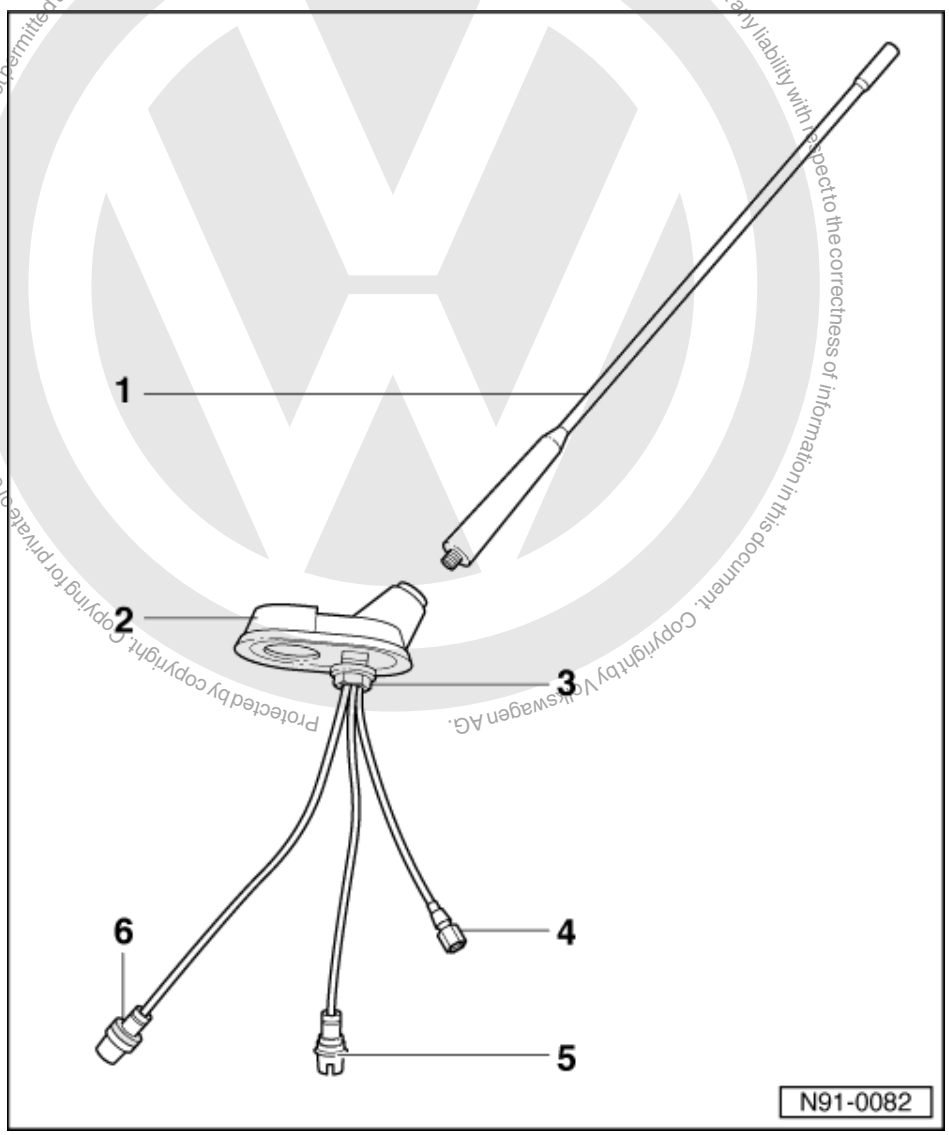

4 Navigation system connector

The navigation connector must be screwed together and is shorter than the telephone connection.

5 Radio system connector

The radio connector is fitted to the wire for the radio.

6 Telephone system connector

The telephone connector must be fitted to the telephone system wire. This connector is shorter than the connector for the radio system.

satelettronica

Removing and installing aerial

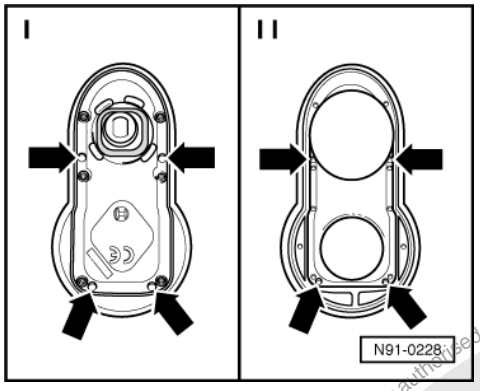

- Lower rear area of moulded headliner.

There are four cut-outs in the seal for the aerial base (-arrows- in part I of illustration).

Ensure these cut-outs are fitted exactly onto their respective pins on the aerial base when installing (-arrows- in part II of illustration).

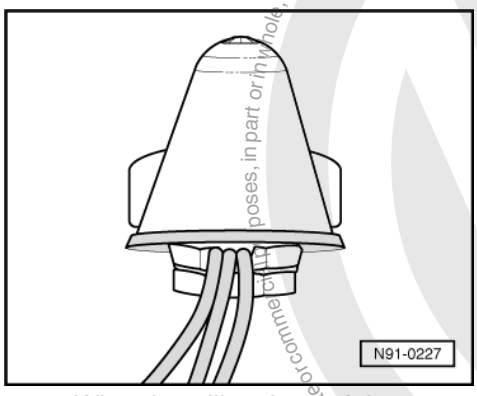

- -> When installing the aerial, ensure the aerial cables are routed in the groove of the securing nut as illustrated.

3 - Loudspeaker system

3.1 - Loudspeaker system

3.2 - Removing and installing loudspeaker, vehicles >09.99

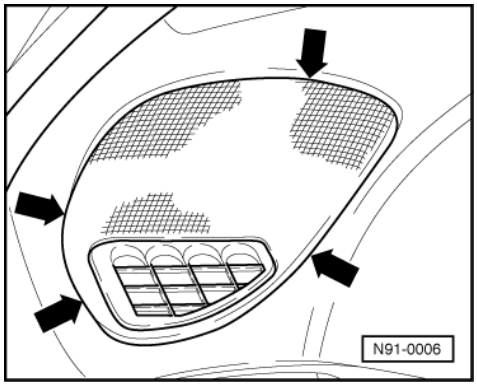

Protected by copyright. Copying for private or commercial purposes, in part or in whole, is not permitted unless authorised by Volkswagen AG. Volkswagen AG does not guarantee or accept any liability with respect to the correctness of information in this document. Copyright by Volkswagen AG.
satelettronica

Protected by copyright. Copying for private or commercial purposes, in part or in whole, is not permitted unless authorised by Volkswagen AG. Volkswagen AG does not guarantee or accept any liability with respect to the correctness of information in this document. Copyright by Volkswagen AG.

satelettronica

Removing and installing loudspeaker in dash panel

-> Removing:

- Carefully lever off loudspeaker cover using a screwdriver -arrows-.
- Lever out base plate with a screwdriver.
- Pull off connector.

Installing:

- Push on connector.
- Observe installation marks on loudspeaker.

Removing and installing bass loudspeaker

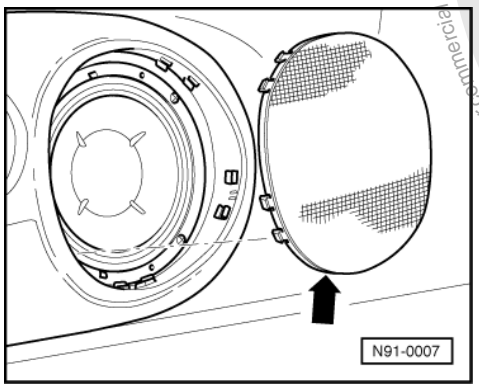

-> Removing:

- Carefully lever off loudspeaker cover with a screwdriver.
- Remove 4 screws on loudspeaker.
- Take out loudspeaker.
- Pull off connector.

Installing:

- Push on connector
- Observe installation marks on loudspeaker.
- Install loudspeaker cover with marking at bottom -arrow-.

3.3 - Removing and installing loudspeaker, vehicles 10.99 >

Front treble loudspeaker

The domed treble loudspeakers in the front doors is permanently attached to the exterior mirror triangular cover.

Removing:

The door trim must be removed first to enable a loudspeaker to be renewed.

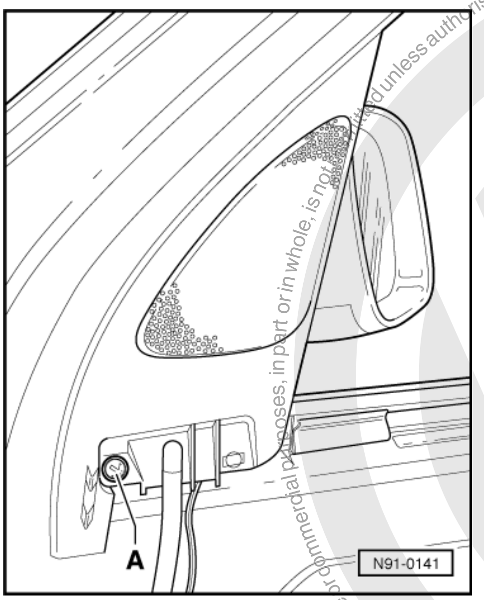

- -> Remove bolt -A-.
- Pull triangular cover off door from upper edge.
- Slide mirror triangular cover carefully upwards.
- Pull off connector.

Installing:

Installation is carried out in the reverse sequence!

Rear treble loudspeaker

The domed treble loudspeakers in the rear door are permanently attached to the door opener (release) cover.

The door trim must be removed first and then the door opener (release) to enable a loudspeaker to be renewed.

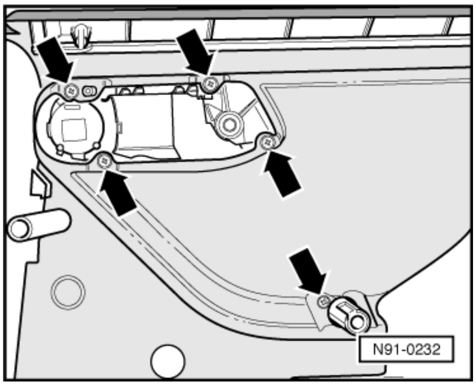

Removing:

- Remove door trim.
- Disconnect cable connector to loudspeaker.
- -> Remove door opener cover securing bolts -arrows- and take door opener cover out of door trim.

Installing:

Installation is carried out in the reverse sequence!

Protected by copyright. Copying for private or commercial purposes, in part or in whole, is not permitted unless authorised by Volkswagen AG. Volkswagen AG does not guarantee or accept any liability with respect to the correctness of information in this document. Copyright by Volkswagen AG.

satelettronica

Front and rear bass loudspeaker

Removing:

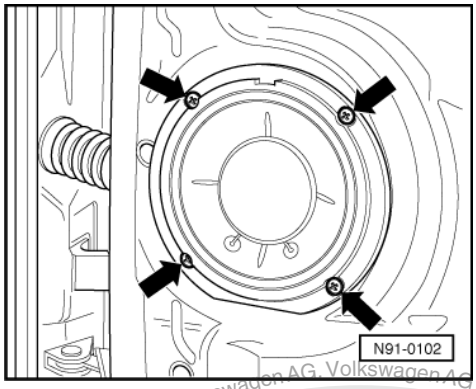

The door trim must be removed first to enable a loudspeaker to be removed.

- -> Remove 4 screws on loudspeaker.
- Take out loudspeaker.
  Pull off connector.

Installing:

- Observe installation marks (guide pins) on loudspeaker.

Installation is carried out in the reverse sequence!

4 - Radio/Navigations System (RNS) with multi-function display (MFD)

4.1 - Radio/Navigations System (RNS) with multi-function display (MFD)

Before beginning repair work, perform the following steps:

- Switch off all electrical consumers.
- Switch off ignition.
  Pull out ignition key.

Notes:

- When faced with complaints it is absolutely necessary to know the functions and how to operate the radio/ navigation system.
- Additional information

=> Operating instructions

=> Self-study programme No. 199

- The anti-theft coding is a fixed code.

=> Operating instructions

- When retrofitting, repairing or fault finding

=> Self-diagnosis

=> Current flow diagrams, Electrical fault finding and Fitting locations

Protected by copyright. Copyright by Volkswagen AG. Volkswagen AG does not guarantee or accept any liability with respect to the correctness of information in this document. Copyright by Volkswagen AG. Protected by copyright. Copying for private or commercial purposes, in part or in whole, is not permitted unless authorised by Volkswagen AG.
satelettronica

=> Installation instructions

- If the navigation system is not producing accurate data, adapt the tyre circumference and the impulse rate of the ABS wheel speed sensors => Adapting components, navigation system.
- When the battery is reconnected, check operation of electrical equipment (radio, clock and convenience electrics etc.) according to Workshop Manual or Owner's Manual.

4.2 - General description

The radio/navigation system (RNS) combines the functions of a navigation system with that of a high quality RDS car radio.

Installed in the systems double DIN housing are

- a RDS radio receiver
- a 5-inch liquid crystal colour display
- a navigation system with GPS satellite receiver
- a CD-ROM drive for the navigation system.

A connector on the housing connects the radio, telephone and navigation operation aerial with the navigation system.

Connections are provided to extend the radio functions for a 6 disc magazine CD changer.

A TV input on the back of the housing makes possible the use of TV and Video functions.

Fault finding

The radio navigation system is equipped with self-diagnosis.

The self diagnosis must be initiated at the commencement of fault finding and the stored information interrogated with the

Vehicle Diagnosis, Testing and Information system VAS 5051 or

Fault reader V.A.G 1551 or

Vehicle system tester V.A.G 1552.

4.3 - Electronic anti-theft system

The radio/navigation system is equipped with an electronic anti-theft system.

If the electronic anti-theft protection is activated, the light emitting diode (top right in front plate) flashes when the radio unit and ignition is switched off.

After the radio/navigation system is switched on, the light emitting diode goes out and the system is ready to use.

The anti-theft alarm becomes effective and locks the system as soon as

- The voltage supply (terminal 30) drops below a predetermined value
- The radio part fuse is blown.

and naturally also when

- The battery (terminal 30) is disconnected to perform work on the vehicle.

Protected by copyright. Copyright by Volkswagen AG. AG Volkswagen does not guarantee or accept any liability with respect to the correctness of information in this document. Copyright by Volkswagen AG. Unauthorised use, in part or in whole, is not permitted without the express authorised by Volkswagen AG.
satelettronica

When the system has been blocked via the electronic anti-theft alarm this is indicated by "SAFE" being displayed in the display when the unit is switched on.

Removing electronic lock

Reactivating the system is only possible by entering the correct electronic anti-theft alarm code number.

- Obtain code number of unit

Notes:

The code number along with the unit number is stuck onto the radio card.

=> Instruction Manual

For reasons of security the radio card should not be kept in the vehicle. The code number must be obtained from the customer if necessary.

Each unit has its own code number.

If the radio navigation system has been replaced then the code number for the replacement unit must be used.

The customer must be informed of the new code number.

- Switch radio/navigation system on.

The word "SAFE" appears in the display. Above this the note "Please enter code" and the figures "0000" appear.

- Enter the code number that has been stuck onto the radio card by selecting the relevant numbers from the letters and numbers selection box one after another and confirming.

Note:

Entering the 1st number overwrites the row of figures "0000".

- Confirm the code by pressing the right-hand rotary/press button.

The unit will be released and is ready for use.

If the code number has been entered correctly into the radio navigation system, the light emitting diode located on the top right of the unit will flash when the ignition key is removed. If the diode flashes the radio navigation system is ready for operation and the anti-theft coding is active.

If an incorrect code number has been entered inadvertently to release the electronic lock, "SAFE" appears in display, flashing at first and then appearing continuously.
Now the procedure to release the electronic lock can be repeated again.

If an incorrect code number is entered again the unit is blocked for 60 minutes.

A further attempt to release the electronic lock is only possible after the blocking period has elapsed.

During the blocked period the unit must remain switched on and the ignition key must remain in the ignition lock.

After the blocking period has elapsed the number of attempts in the display is erased and the electronic lock can be released as described.

Protected by copyright. Copyright by Volkswagen AG. Volkswagen AG does not guarantee or accept any liability with respect to the correctness of information in this document. Copyright by Volkswagen AG. Reproduction, in whole or in part, for commercial purposes, is not permitted unless authorised by Volkswagen AG.
satelettronica

4.4 - Connections on radio navigation system

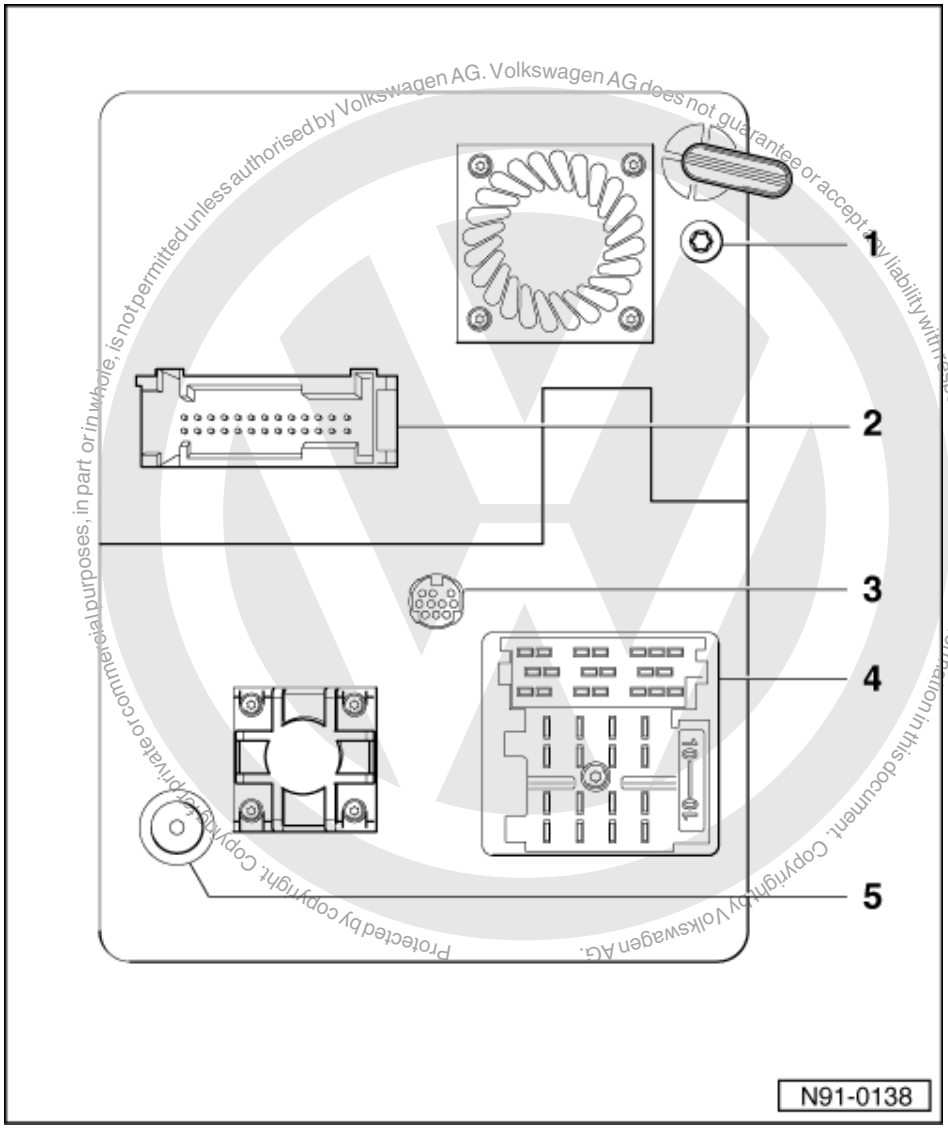

Protected by copyright. Copyright by Volkswagen AG.
Copyright by Volkswagen AG. Volkswagen AG does not guarantee or accept any liability with respect to the correctness of information in this document. Copyright by Volkswagen AG. Volkswagen AG, is not permitted unless authorised by Volkswagen AG. Volkswagen AG does not guarantee or accept any liability with respect to the correctness of information in this document. Copyright by Volkswagen AG.

1 Navigation system aerial connection
2 26-pin connection for navigation sensors
Contact assignment =>page 109 .
3 RGB connection (Video)
This connection is not wired up.
4 Multi-pin connections I, II, III
Contact assignment => from page 109 .
5 Radio aerial connection

satelettronica

Contact assignment of 26-pin connector for navigation sensors

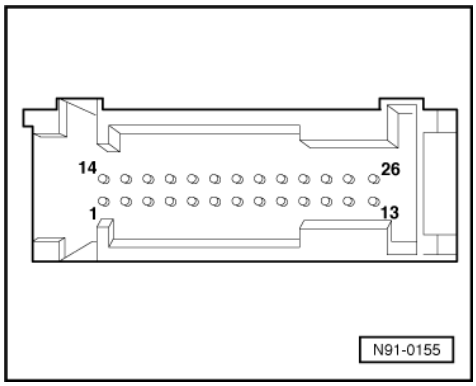

-> 26-pin connector

4 - Terminal 15 (ignition)
5 - Speed sensor output, left
6 - Navigation instructions Nf +
13 - CAN bus High
17 - Reversing light switch
18 - Speed sensor output, right
19 - Navigation instructions Nf -
20 - Navigation instructions Nf screen
26 - CAN bus LOW

Multi-pin connectors I, II, III contact assignment on rear of radio/navigation system

Multi-pin connector I, -T20- consists of 3 parts that are marked with different colours:

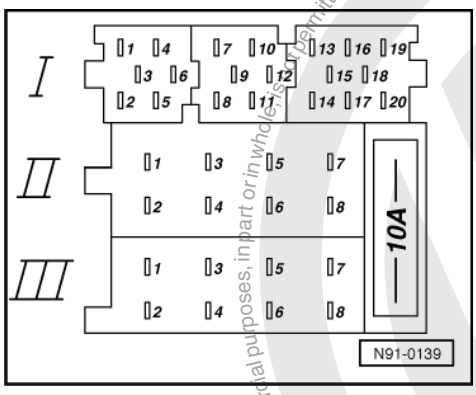

-> Multi-pin connector I, part 1, yellow

1 - Line Out rear left, LR
2 - Line Out rear right, RR
3 - Line Out, earth
4 - Line Out front left, LF
5 - Line Out front right, RF
6 - Switched positive for sound amplifier

Multi-pin connector I, part 2, green

7 - Telephone input signal, TEL+
8 - Second display, CLOCK
9 - Second display, DATA
10 - Second display, ENA
11 - Remote control, REM

Protected by copyright. Copying for private or commercial purposes, in part or in whole, is not permitted unless authorised by Volkswagen AG. Volkswagen AG does not guarantee or accept any liability with respect to the correctness of information in this document. Copyright by Volkswagen AG.
satelettronica

12 - Telephone input signal, TEL-

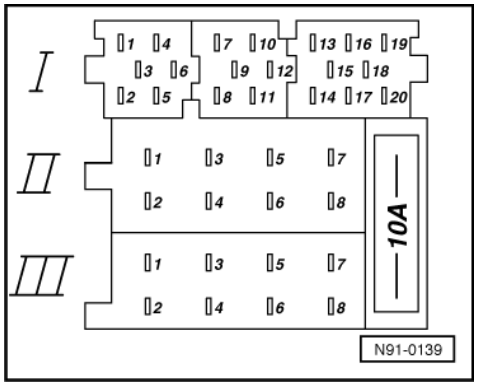

-> Multi-pin connector I, part 3, blue

13 - CD changer, DATA IN
14 - CD changer, DATA OUT
15 - CD changer, CLOCK
16 - CD changer, terminal 30 voltage supply (+)
17 - CD changer, control signal
18 - CD changer, left and right channel, earth
19 - CD changer, left channel, CD/L
20 - CD changer, right channel, CD/R

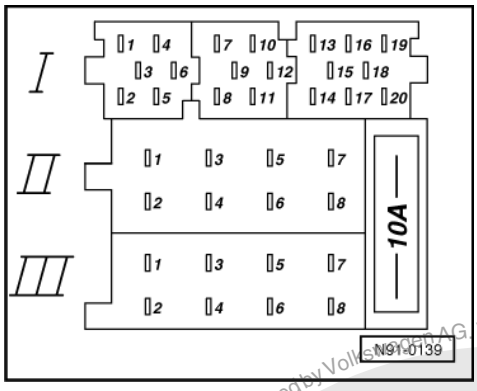

-> Multi-pin connector II, -T8a-, 8-pin, brown

1 - Loudspeaker + rear right
2 - Loudspeaker - rear right
3 - Loudspeaker + front right
4 - Loudspeaker - front right
5 - Loudspeaker + front left
6 - Loudspeaker - front left
7 - Loudspeaker + rear left
8 - Loudspeaker - rear left

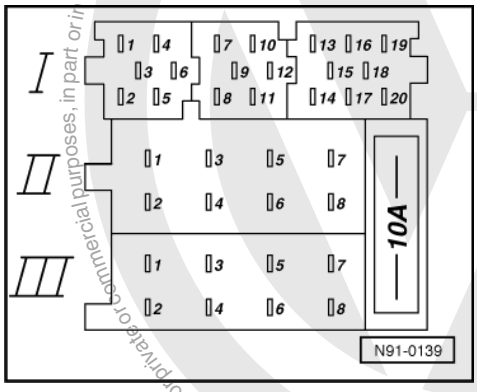

Protected by copyright. Copying for private or commercial purposes, in part or in whole, is not permitted unless authorised by Volkswagen AG. Volkswagen AG does not guarantee or accept any liability with respect to the correctness of information in this document. Copyright by Volkswagen AG.

satelettronica

Protected by copyright. Copying for private or commercial purposes, in part or in whole, is not permitted unless authorised by Volkswagen AG. Volkswagen AG does not guarantee or accept any liability with respect to the correctness of information in this document. Copyright by Volkswagen AG.

-> Multi-pin connector III, -T8-, 8-pin, black

1 - Gala (volume adaption)
2 - Telephone mute circuit
3 - Self-diagnosis/K wire
4 - Connection for ignition key controlled switching on and off (S contact)
5 - Anti-theft system control signal, SAFE
6 - Illumination (terminal 58b)
7 - Battery + (terminal 30)
8 - Battery - (terminal 31)

4.5 - Removing and installing radio/navigation system

Note:

- The part number for the complete Radio/Navigation system is printed on a sticker on the radio/navigation system housing!
- If an RNS unit from a vehicle is fitted into a different vehicle, it is essential that the part number of the replacement unit is the same as the unit previously installed. Otherwise faults will occur with the navigation as the turn angle sensor adjustment in the RNS unit will not be compatible for the vehicle.
- If the RNS unit is replaced by a new part or exchange part the new unit is coded ex factory with the setting "with control unit for traffic information". If the vehicle has no traffic information control unit, the fault "00481" is set on these vehicles. Please select on these vehicles the setting "without control unit for traffic information" via the adaption function, Adaption => page 45 .

Note:

For new units, adaption of traffic information control unit is performed via the navigation system coding, => Coding navigation system, => Page 37 .

- If the radio navigation unit is renewed or replaced, it is possible to adapt the impulse rate of the ABS wheel speed sensors and the tyre circumference to improve accuracy of the system. Adapting components, navigation system => page 45 .

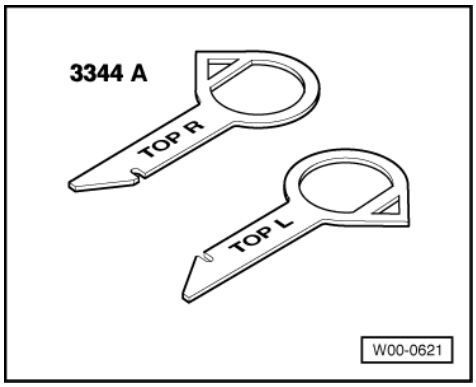

Special tools, testers, measuring instruments and auxiliary items required

- 3344A Release tool

  To remove the radio/navigation system 2 sets of release tool 3344A are required.

satelettronica

Removing:

Note:

Before removing the radio/navigation system obtain the radio code from the customer. If the radio/navigation system is replaced, always activate the electronic anti-theft coding (see Instruction Manual). The customer must be informed of the new code.

Carry out work sequence as follows:

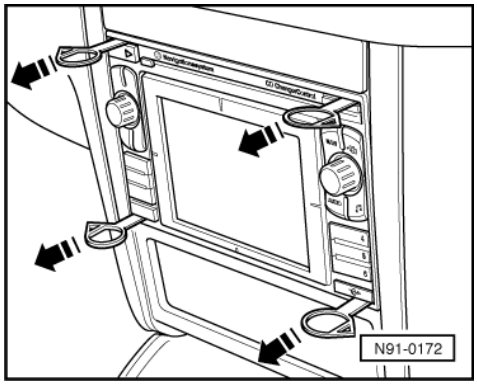

- -> Slide radio release tool 3344 into the release slots as shown until they locate.

  Top L - top and bottom on left
  Top R - top and bottom on right

- -> Pull radio/navigation system out of the dash panel using the grip rings of the release tools.
- Release connections and pull off.

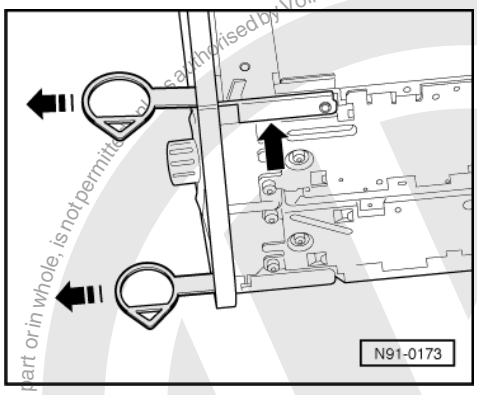

Pulling out release tools:

- -> Press locking tab -arrow- and pull release tool out forwards.

Installing:

- Fit connector to radio/navigation system.
- Slide radio/navigation system straight into the dash panel, until it engages in the assembly frame.

Note:

Never press on display or the operating unit when fitting the radio/navigation system unit, otherwise they may be damaged.

- Check the radio/navigation system code and recode the radio/navigation system as necessary.
- Coding radio system in radio/navigation system => Coding radio functions => page 26 .

Copyright by Volkswagen AG. Volkswagen AG does not guarantee or accept any liability with respect to the correctness of information in this document. Copying for private or commercial purposes, in part or in whole, is not permitted unless authorised by Volkswagen AG.
satelettronica

- Coding navigation system in radio/navigation system => Coding navigation system => page 37 .

5 - Radio navigation system (RNS)

5.1 - Radio navigation system (RNS)

Before beginning repair work, perform the following steps:

- Switch off all electrical consumers.
- Switch off ignition.
- Pull out ignition key.

Notes:

- When faced with complaints it is absolutely necessary to know the functions and how to operate the radio/navigation system.
- Additional information

=> Operating instructions

=> Self-study programme No. 199

- The anti-theft coding is a fixed code.

=> Operating instructions

- When retrofitting, repairing or fault finding

=> Self-diagnosis

=> Current flow diagrams, Electrical fault finding and Fitting locations

=> Installation instructions

- A gyro-compass in the vehicle is set according to the installation position of the unit to ensure the navigation system functions perfectly. Therefore always observe the part number when exchanging a unit. An incorrect installation will cause the navigation system to operate with flaws.
- If the navigation system is producing inaccurate results, adapt the tyre circumference => Adapting components, navigation system Page 76 .
- When the battery is reconnected, check operation of electrical equipment (radio, clock and convenience electrics etc.) according to Workshop Manual or Owner's Manual.

5.2 - General description

The radio/navigation system (RNS) combines the functions of a navigation system with that of a high quality RDS car radio.

Installed in the systems double DIN housing are

- a RDS radio receiver
- a dot matrix liquid crystal display
- a navigation system with GPS satellite receiver
- a CD-ROM drive for the audio and navigation system.

Two connectors on the housing connects the radio, telephone and navigation aerial with the radio/navigation system.

satelettronica

The CD drive can read a CD-ROM for navigation or a music CD. Whilst playing a music CD only restricted operation of the navigation system is possible.

Notes:

- No 8 cm diameter music CDs (mini discs) can be played.
- If an 8 cm diameter music CD (mini disc) is pushed into the drive it cannot be ejected.
- No mix CDs (CDs where computer data and music are stored together on a CD).

Fault finding

The radio navigation system is equipped with self-diagnosis.

The self diagnosis must be initiated at the commencement of fault finding and the stored information interrogated with the

Vehicle Diagnosis, Testing and Information system VAS 5051 or

Fault reader V.A.G 1551 or

Vehicle system tester V.A.G 1552.

5.3 - Electronic anti-theft system

The radio/navigation system is equipped with an electronic anti-theft system.

If the electronic anti-theft protection is activated, the light emitting diode (top right in front plate) flashes when the radio unit and ignition is switched off.

After the radio/navigation system is switched on, the light emitting diode goes out and the system is ready to use.

The anti-theft alarm becomes effective and locks the system as soon as

- The voltage supply (terminal 30) drops below a predetermined value
- The radio/navigation system fuse is blown
- The battery (terminal 30) is disconnected to perform work on the vehicle.
- The radio/navigation system is disconnected from voltage supply (terminal 30) (e.g. when removing radio/navigation system).
- The radio navigation system is installed in another vehicle.

- The dash panel insert is changed.

When the system has been blocked via the electronic anti-theft alarm this is indicated by "SAFE" being displayed in the display when the unit is switched on.

Removing electronic lock

Reactivating the system is only possible by entering the correct electronic anti-theft alarm code number.

- Obtain code number of unit

Notes:

The code number along with the unit number is stuck onto the radio/navigation system card.

=> Instruction Manual

Protected by copyright. Copying for private or commercial purposes, in part or on whole, is not permitted unless authorised by Volkswagen AG. Volkswagen AG does not guarantee or accept any liability with respect to the correctness of information in this document. Copyright by Volkswagen AG.

satelettronica

For reasons of security the radio/navigation system card should not be kept in the vehicle. The code number must be obtained from the customer if necessary.

Each unit has its own code number.

If the radio navigation system has been replaced then the code number for the replacement unit must be used.

The customer must be informed of the new code number.

- Switch radio/navigation system on.

The word "SAFE" appears in the display. Above this the note "Please enter code" appears.

Thereafter the word "SAFE" disappears and "1000" appears.

- With the help of station buttons 1 to 4 enter code number printed on radio navigation system card. Use button 1 to input the first digit of the code number, button 2 to input the 2nd digit and so on.
- Confirm the code by pressing the right-hand rotary/press button.

The unit will be released and is ready for use.

If the code number has been entered correctly into the radio navigation system, the light emitting diode located on the top right of the unit will flash when the ignition key is removed. If the diode flashes the radio navigation system is ready for operation and the anti-theft coding is active.

Note:

Entering the 1st number overwrites the row of figures "1000".

If an incorrect code number has been entered inadvertently to release the electronic lock, "WRONG TRIES: 1" will appear in the display.
Now the procedure to release the electronic lock can be repeated once more.

If an incorrect code number is entered again, "CODE LOCK ACTIVE 1H" will appear in the display and the unit will be blocked for 60 minutes.

A further attempt to release the electronic lock is only possible after the blocking period has elapsed.

During the blocked period the unit must remain switched on and the ignition key must remain in the ignition lock.

After the blocking period has elapsed the number of attempts in the display is erased and the electronic lock can be released as described.

Note:

If during the initial activation of the electronic anti-theft system the code is entered incorrectly twice the RNS will be electronically locked for 1 hour.

The electronic lock period can be reversed by entering the correct code via the Login procedure on V.A.G 1551. The procedure is described as follows.

Lifting the electronic lock after an incorrect entry is only possible when initially activating the electronic anti-theft system.

Connecting fault reader V.A.G 1551 and selecting functions (Interrogating unit version)

Check prerequisites:

- All fuses according to current flow diagram OK.
- Supply voltage OK. (at least 9.5 V).

Special tools, testers and auxiliary items required

Please copy copyright Copyright by Volkswagen AG. Volkswagen AG does not guarantee or accept any liability with respect to the correctness of information in this document. Copyright by Volkswagen AG. Volkswagen AG, in part or in whole, is not permitted unless authorised by Volkswagen AG. Volkswagen AG does not guarantee or accept any liability with respect to the correctness of information in this document. Copyright by Volkswagen AG.
satelettronica

- Fault reader V.A.G 1551
- Adapter cable V.A.G 1551/3

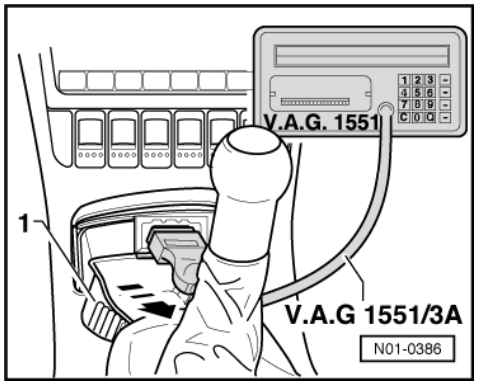

- -> Pull out ashtray insert -1- in direction of arrow.
- Connect fault reader or system tester using cable V.A.G 1551/3 to diagnosis connection.

-> Indicated on display:

```
V.A.G - SELF DIAGNOSIS     HELP
     1 - Rapid data transfer*
     2 - Flash code output*
```

* Appears alternately

Notes:

- If the display remains blank, check V.A.G 1551 voltage supply according to current flow diagram.

=> Current flow diagrams, Electrical fault finding and Fitting locations binder

- Additional operating instructions can be called up with the fault reader HELP key.
- The ⇒ key serves to advance the programme sequence.
- In the operating mode 1 "Rapid data transfer" the function 00 "Automatic test sequence" can be carried out. Then all vehicle control units will be interrogated automatically.
- The radio unit is switched to mute during self-diagnosis.

- Switch on ignition.
- Press key 1 for "Rapid data transfer" mode.

-> Indicated on display:

```
Rapid data transfer      HELP
Input address word XX
```

- Press keys 5 and 6. "56" enters the address word "Radio".

-> Indicated on display:

```
Rapid data transfer       Q
56 Radio
```

- Confirm entry with Q key.

-> Indicated on display:

```
Rapid data transfer       Q
Tester sends address word 56
```

-> Indicated on display:

```
1J0035152 D     Radio     0001
Coding     01407     WSC     00000
```

- Press ⇒ key.

Protected by copyright. Copying for private or commercial purposes, in part or in whole, is not permitted unless authorised by Volkswagen AG. Volkswagen AG does not guarantee or accept any liability with respect to the correctness of information in this document. Copyright by Volkswagen AG.
satelettronica

-> Indicated on display:

```
Rapid data transfer      HELP
Select function XX
```

-> Will be indicated on display:

```
Control unit does not answer!      HELP
```

- By pressing the "HELP" key a list of possible fault causes is printed out.
- After rectifying faults, enter address word 56 for radio again and confirm with Q.

-> Indicated on display:

```
1J0035152 D      Radio      0001
Coding      01407      WSC      00000
```

- Press ⇒ key.

-> Indicated on display:

```
Rapid data transfer      HELP
Select function XX
```

- Press key 1 twice. (11 selects the "Login procedure" function.)

-> Indicated on display:

```
Rapid data transfer      Q
11 - Login procedure
```

- Confirm entry with key Q.

-> Indicated on display:

```
Login procedure
Enter code number      XXXXXX
```

Then enter the correct code number, to do this first enter a "0", then the 4-digit anti-theft code.

-> Indicated on display, e.g.:

```
Login procedure      Q
11 - Login procedure      01618
```

- Confirm entry with key Q.

-> Indicated on display:

```
Rapid data transfer      HELP
Select function XX
```

Ending output

- Press keys 0 and 6. (The function "End output" is selected with 06.)

-> Indicated on display:

```
Rapid data transfer      Q
06 End output
```

- Confirm entry with key Q.

-> Indicated on display:

```
Rapid data transfer      Help
Enter address word XX
```

- Switch off ignition.
- Disconnect fault reader V.A.G 1551.

Protected by copyright. Copying for private or commercial purposes, in part or in whole, is not permitted unless authorised by Volkswagen AG. Volkswagen AG does not guarantee or accept any liability with respect to the correctness of information in this document. Copyright by Volkswagen AG.
satelettronica

- Activate the electronic anti-theft code on the radio using the correct code =>page 114 .

5.4 - Connections on radio navigation system

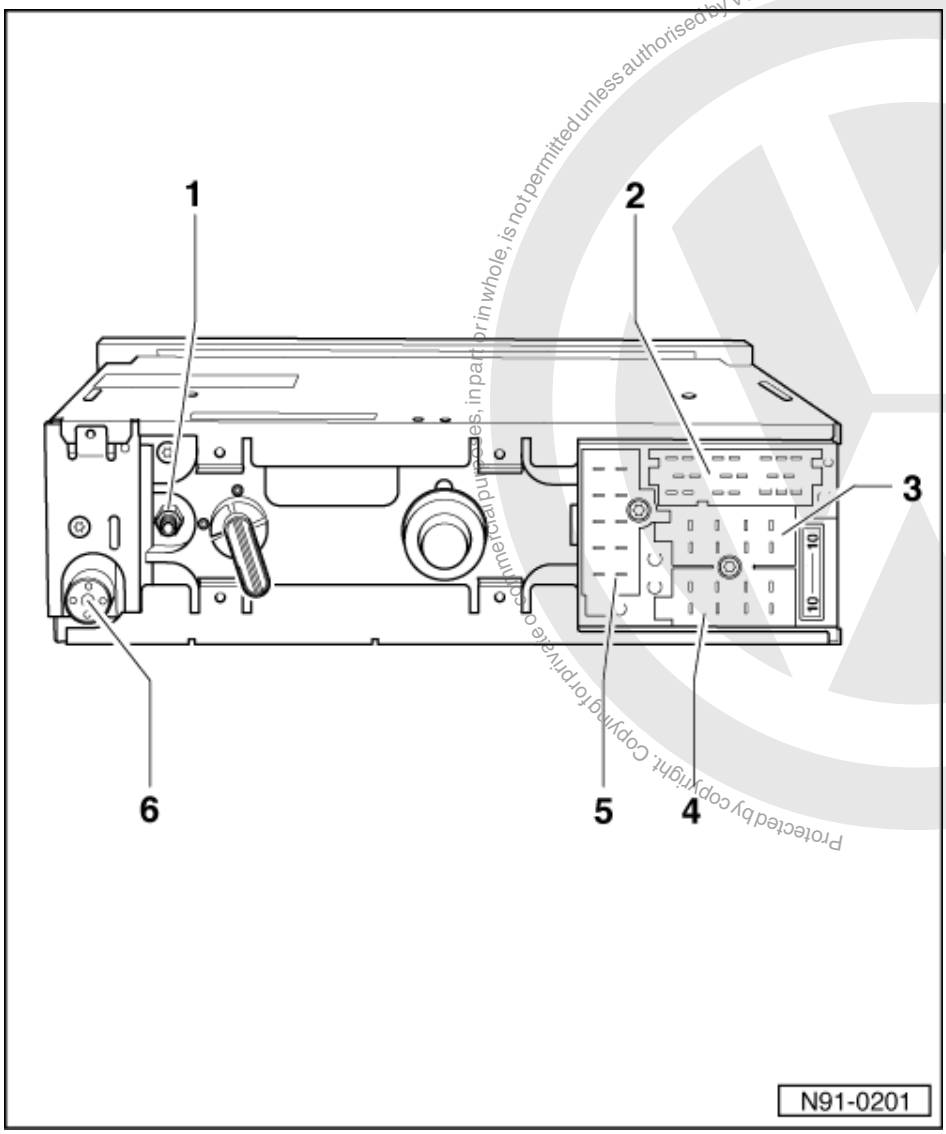

1 Navigation system aerial connection
2 Multi-pin connection I
- 20-pin connection for DSP, pre-amplifier output, telephone speech input and second display as well as CD changer control
- Pin assignment =>page 119

3 Multi-pin connection II
- 8-pin connection for loudspeaker output
- Pin assignment =>page 120

Protected by copyright. Copying for private or commercial purposes, in part or in whole, is not permitted unless authorised by Volkswagen AG. Volkswagen AG does not guarantee or accept any liability with respect to the correctness of information in this document. Copyright by Volkswagen AG.
satelettronica

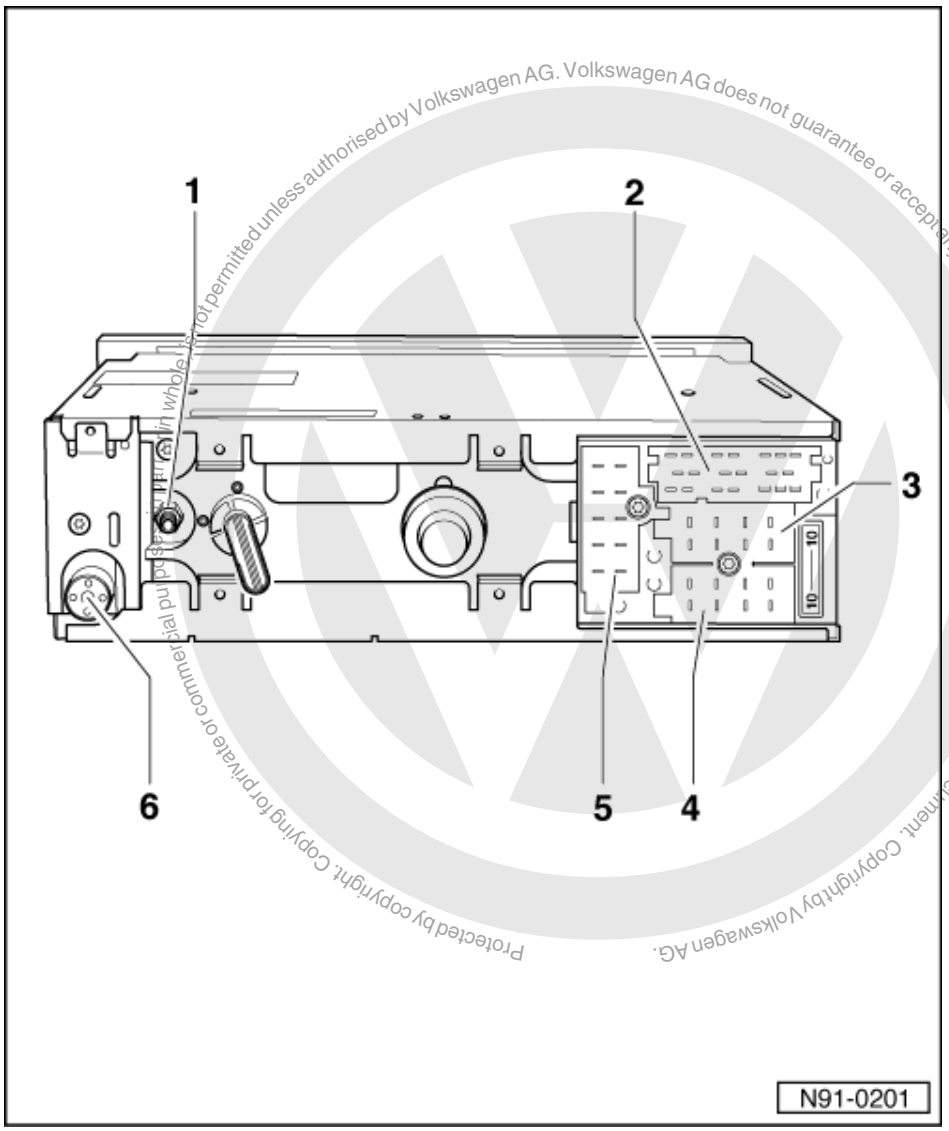

Protected by copyright. Copying for private or commercial purposes, in whole or in part, is not permitted unless authorised by Volkswagen AG. Volkswagen AG does not guarantee or accept any liability with respect to the correctness of information in this document. Copyright by Volkswagen AG.

4 Multi-pin connection III
- 8-pin connection for supply voltage, telephone mute, GALA signal, illumination, "Safe" locking and S contact
- Pin assignment =>page 121

5 Multi-pin connection IV
- 10-pin connection for navigation sensors
- Pin assignment =>page 121

6 Radio aerial connection

Pin assignment for multi-pin connection I

Multi-pin connector I, -T20- consists of 3 parts that are marked with different colours:

satelettronica

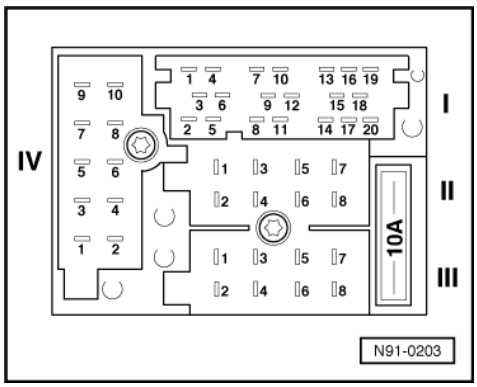

-> Multi-pin connector I, part 1, yellow

1 - Vacant
2 - Vacant
3 - Line Out, earth
4 - Line Out front left, LF
5 - Line Out front right, RF
6 - Switched positive for sound amplifier

Multi-pin connector I, part 2, green

7 - Telephone input signal, TEL+
8 - Second display, CLOCK (precondition for data flow pulse frequency)
9 - Second display, DATA (exchange of data for dash panel insert with second display)
10 - Second display, ENA (monitoring of data flow and feedback of successful data transfer)
11 - Remote control
12 - Telephone input signal, TEL-

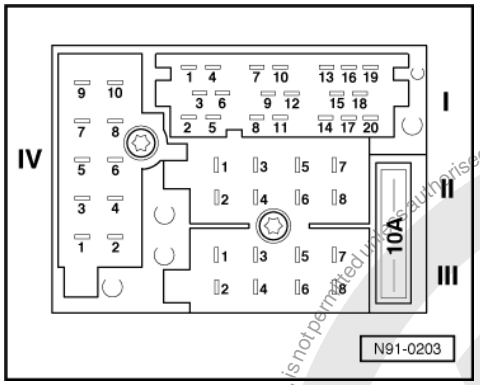

-> Multi-pin connector I, part 3, blue

13 - CD changer, DATA IN (data to radio)
14 - CD changer, DATA OUT (data from radio)
15 - CD changer, CLOCK (precondition for data flow pulse frequency)
16 - CD changer, terminal 30 voltage supply (+)
17 - CD changer, control signal
18 - CD changer, left and right channel, earth
19 - CD changer, left channel, CD/L
20 - CD changer, right channel, CD/R

Pin assignment for multi-pin connection II

Multi-pin connector II, -T8a-, 8-pin, brown

1 - Loudspeaker + rear right
2 - Loudspeaker - rear right
3 - Loudspeaker + front right

Protected by copyright. Copying in whole or in part is not permitted unless authorised by Volkswagen AG. Volkswagen AG does not guarantee or accept any liability with respect to the correctness of information in this document. Copyright by Volkswagen AG.

satelettronica

4 - Loudspeaker - front right
5 - Loudspeaker + front left
6 - Loudspeaker - front left
7 - Loudspeaker + rear left
8 - Loudspeaker - rear left

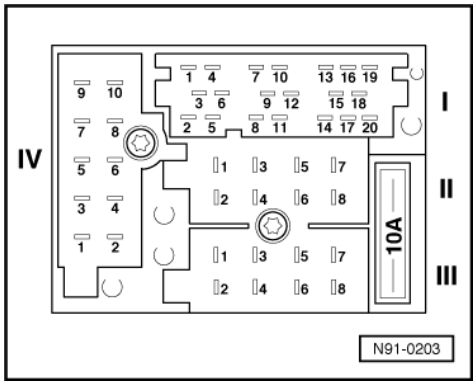

Pin assignment for multi-pin connection III

-> Multi-pin connector III, -T8-, 8-pin, black

1 - Gala (volume adaption)
2 - Telephone mute circuit
3 - Self-diagnosis/K wire
4 - Connection for ignition key controlled switching on and off (S contact)
5 - Anti-theft system control signal, SAFE
6 - Illumination (terminal 58b)
7 - Battery + (terminal 30)
8 - Battery - (terminal 31)

Pin assignment for multi-pin connection IV

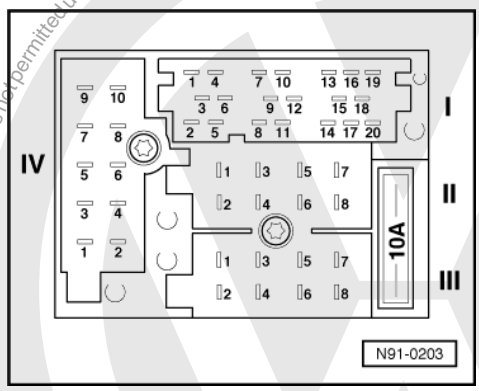

-> Multi-pin connection IV, -T10-, 10-pin, red

1 - CAN bus earth for DSP system
2 - Speech earth (instructions)
3 - CAN bus low for DSP system
4 - Speech NF positive (instructions)
5 - CAN bus high for DSP system
6 - Speech NF negative (instructions)
7 - Vacant (option with telematics)
8 - Ignition (terminal 15)
9 - Vacant (option with telematics)
10 - Signal reverse gear

satelettronica

5.5 - Removing and installing radio/navigation system

Note:

- The part number for the complete Radio/Navigation system is printed on a sticker on the radio/navigation system housing!
- If an RNS unit from a vehicle is fitted into a different vehicle, it is essential that the part number of the replacement unit is the same as the unit previously installed. Otherwise faults will occur with the navigation as the turn angle sensor adjustment in the RNS unit will not be compatible for the vehicle.
- If the radio navigation unit is renewed or replaced, adapt the tyre circumference to improve accuracy of the radio/navigation system. Adapting components, navigation system => Page 76 .
- If the RNS unit is replaced by a new part or exchange part the new unit is coded ex factory with the setting "with control unit for traffic information". If the vehicle has no traffic information control unit, the fault "00481" is set on these vehicles. Please select on these vehicles the setting "without control unit for traffic information" via the adaption function, Adaption => Page 76 .

Note:

For new units radio information control unit adaption is performed via the navigation system coding, => Coding navigation system, => Page 69 .

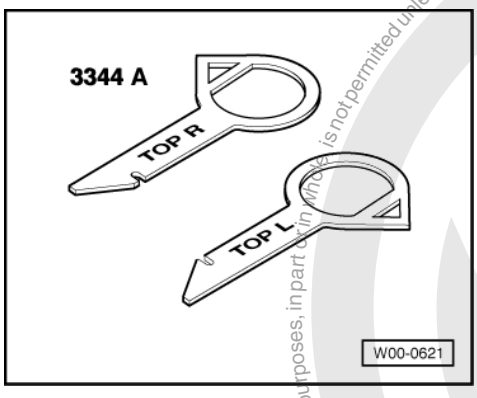

Special tools, testers, measuring instruments and auxiliary items required

- 3344A Release tool

  To remove the radio/navigation system 2 sets of release tool 3344A are required.

Removing:

Note:

Before removing the radio/navigation system obtain the radio code from the customer. If the radio/navigation system is replaced, always activate the electronic anti-theft coding (see Instruction Manual). The customer must be informed of the new code.

Carry out work sequence as follows:

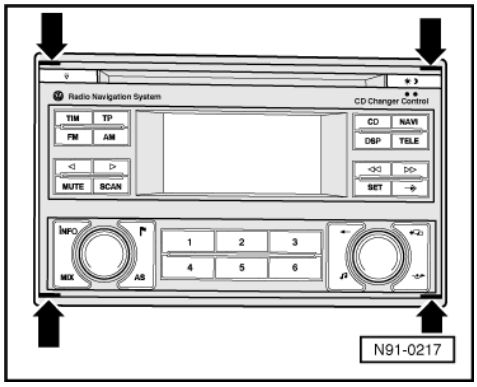

Protected by copyright. Copying for private or commercial purposes, in part or in whole, is not permitted unless authorised by Volkswagen AG. Volkswagen AG does not guarantee or accept any liability with respect to the correctness of information in this document. Copyright by Volkswagen AG.
satelettronica

- -> Slide radio release tool 3344A into the release slots -arrows- until slots engage.

  Top L - top and bottom on left
  Top R - top and bottom on right

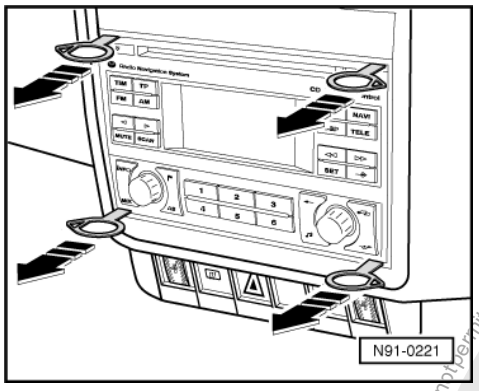

- -> Pull radio/navigation system out of the dash panel using the grip rings of the release tools.
- Release connections and pull off.

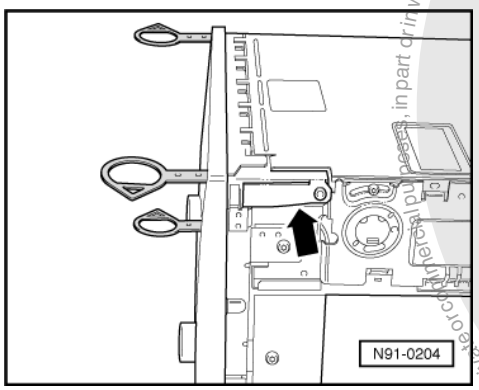

Pulling out release tools:

- -> Press locking tab -arrow- and pull release tool out forwards.

Installing:

- Fit connector to radio/navigation system.
- Slide radio/navigation system straight into the dash panel, until it engages in the assembly frame.

Note:

Never press on display or the operating unit when fitting the radio/navigation system unit, otherwise they may be damaged.

- Check the radio/navigation system code and recode the radio/navigation system as necessary.
- Coding radio system in radio/navigation system => Coding radio functions => page 26 .
- Coding navigation system in radio/navigation system => Coding navigation system => page 69 .

Protected by copyright. Copying for private or commercial purposes, in part or in whole, is not permitted unless authorised by Volkswagen AG. Volkswagen AG does not guarantee or accept any liability with respect to the correctness of information in this document. Copyright by Volkswagen AG.
satelettronica

6 - Notes for mobile telephone and two-way radio operation

6.1 - Notes for mobile telephone and two-way radio operation

6.2 - General notes

Mobile telephones or portable two-way radios may not be used in the vehicle without a separate external aerial.

- Radio remote controls (e.g. for garage door opener) and cableless units (e.g. keyboard or PC mouse) may only be used in the vehicle if the transmitted output is max. 100 mW.
- Installation of CE or e-marked units is only permitted (Europe only).
- It is absolutely necessary to observe the manufacturer's operating and installation instructions for mobile telephones, two-way radios and aerials.
- The optimum unit range is only reached via an external aerial.

- When telephone and two-way radio systems are installed properly there is no danger to safety system e.g. ABS or airbag. A prerequisite is however that there has been no intervention in their installations. Parallel wiring to such systems must be prevented.
- The use of a mobile telephone or a two-way radio without or with an incorrectly installed external aerial results in increased electro-magnetic fields in the vehicle interior.

In this case detrimental affects to health or malfunctions of vehicle electronics could be the consequence.

Installation and operation of radios/telephones with a transmitted output above 10 watt for the radio communication services listed in the table is only permitted regarding the following prerequisites:

- The transmitted output on point of the aerial base must not exceed the relevant max. values (see manufacturer's designations).
- The aerial locations listed in the table must be maintained.

Transmitted output and aerial fitting locations table, => page 14 .

6.3 - Notes on performing repair work

The batteries must be disconnected before beginning repair work!

Use valid current flow diagram.

=> Current flow diagrams, Electrical fault finding and Fitting locations binder.

For removing and installing trim, => Workshop Manual Body repairs.

Observe the manufacturer's operating and installation instructions for mobile telephones, two-way radios and aerials.

Secure wiring harnesses to cable ties. Wrap connectors with foam to avoid rattling noises.

Transmitted output and possible fitting locations

Volkswagen permits the installation and operation of radio units if the transmitted power on point of the aerial base, listed in table, is not exceeded. For prescribed aerial locations see table.

The limiting values according to VDE 0848 part 2 (max. permissible radiation strength for personal protection) must be adhered to by reducing the transmitted output.

Protected by copyright. Copying for private or commercial purposes, in part or in whole, is not permitted unless authorised by Volkswagen AG. Volkswagen AG does not guarantee or accept any liability with respect to the correctness of information in this document. Copyright by Volkswagen AG.

satelettronica

Voltage supply

When retrofitting a transmitter/receiver unit in the vehicle the battery is used to connect the positive and negative wire.

The wiring harness must be manufactured additionally:

- Voltage supply positive via red wire, 2.5 mm cross section.
- Voltage supply negative via brown wire, 2.5 mm cross-section.

The positive wire must be protected with a fuse next to battery. To do this secure fuse holder near battery. Pull insulated hose over positive and negative wires.

Make suitable connections at battery end.

On unit end proceed as per owner's manual.

The additional wiring harness must be routed separately from vehicle wiring, the distance apart must be at least 10 cm.

Note:

- For some telephone systems and radio communication units an additional terminal 15 (ignition) is necessary. Then a black connection (1.5 mm cross-section) must be connected from transmitter/receiver unit to terminal 15a.

=> Current flow diagrams, Electrical fault finding and Fitting locations

- Ensure wiring connections are not routed parallel to the standard wiring.

Aerial and aerial wire

A screened wire must be used between the transmitter/receiver unit and aerial. The screened wire must be connected at the unit end to the unit housing (earth). On aerial end the screened wiring must be connected on aerial base (aerial).

At the same time ensure correct and continuous earth connection of aerial base wire to vehicle body.

The transmitter unit must be matched for operation, in order to prevent disturbances in the aerial wire. Therefore it is recommended to carry out a performance test to match the system, e.g. with telephone tester V.A.G 1883A.

Further additional installations

The installation of further electronic equipment like business equipment (e.g. TV, FAX) or household equipment (e.g. electrical cool box) is only permitted, if these appliances are marked with a CE or e-sign.

Voltage supply is performed via a separate wiring harness and secured by a fuse.

Copyright. Copying for private or commercial purposes, in part or in whole, is not permitted unless authorised by Volkswagen AG. Volkswagen AG does not guarantee or accept any liability with respect to the correctness of information in this document. Copyright by Volkswagen AG.
satelettronica

6.4 - Overview of battery, transmitter/receiver unit, fuse and wiring harness

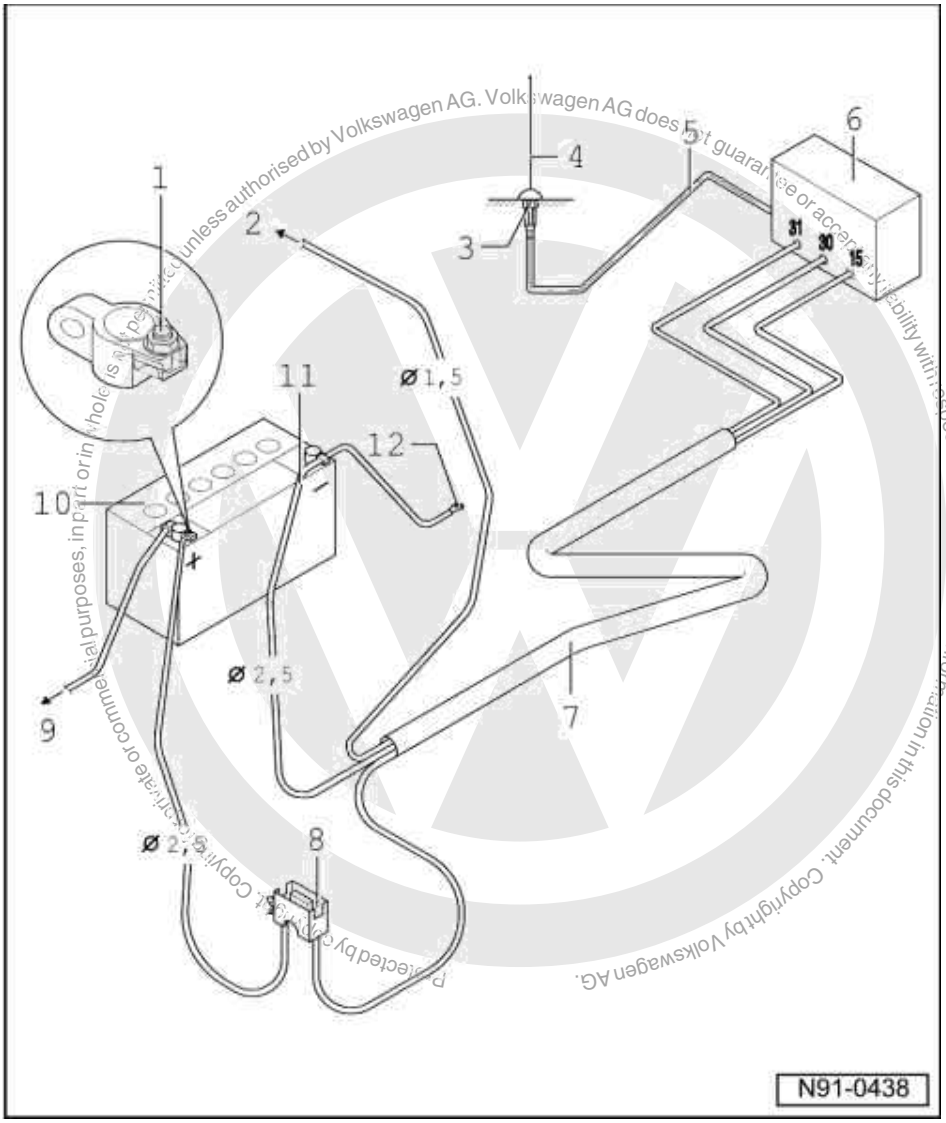

Protected by copyright. Copying for private or commercial purposes, in part or in whole, is not permitted unless authorised by Volkswagen AG. Volkswagen AG does not guarantee or accept any liability with respect to the correctness of information in this document. Copyright by Volkswagen AG.

satelettronica

1 Positive connection
- Red wire with suitable connection.

2 To terminal 15a
- Connection to terminal 15a:

=> Current flow diagrams, Electrical fault finding and Fitting locations binder

- Ensure this wire is protected by a fuse.
- Fuse protection max. 15A

3 Aerial earth
- Ensure correct earth connection to body.
- The aerial location must be treated with suitable corrosion protection.

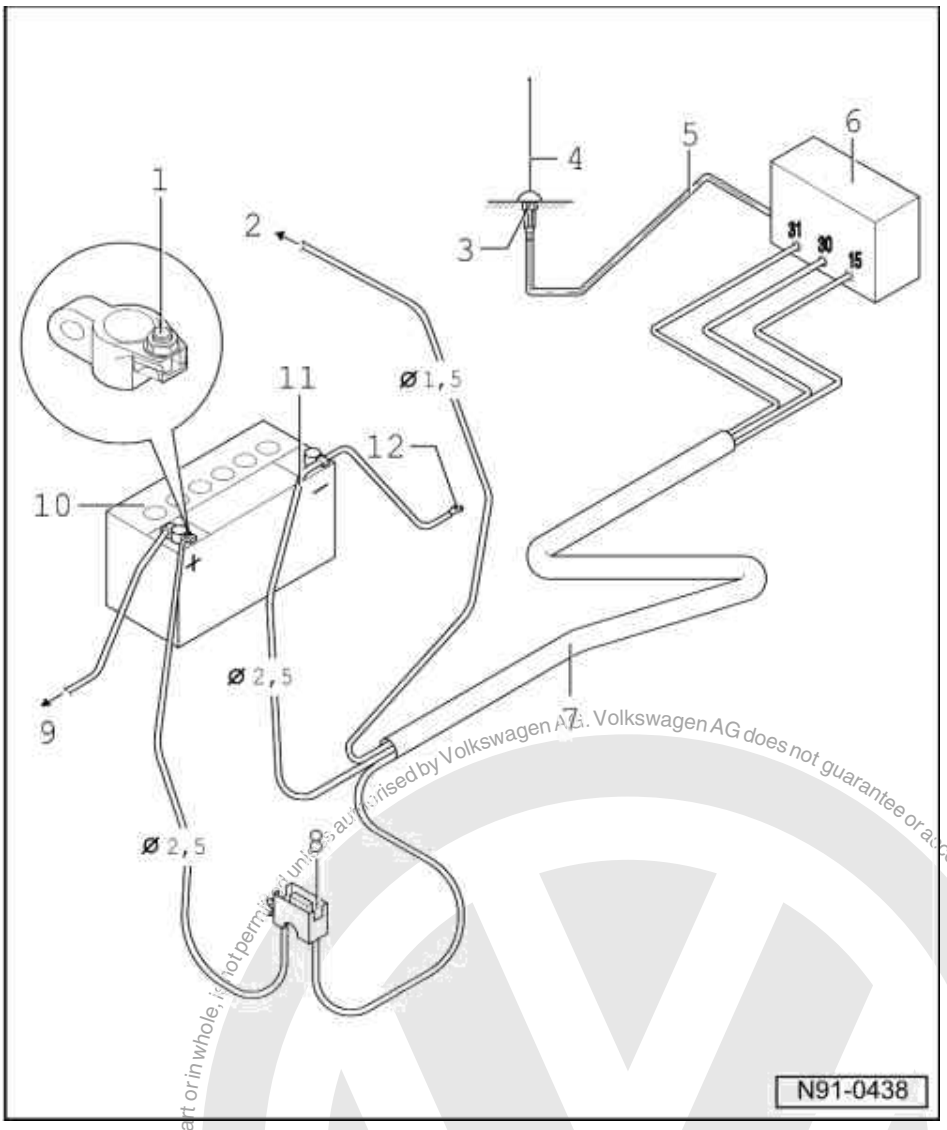

4 Transmitter/receiver aerial
- Fitting locations: => table page 14 .

5 Screened aerial wire
- Wire with coaxial connector

6 Telephone or two-way radio transmitter/receiver unit

7 Wiring harness
- Voltage supply positive via red wire 2.5 mm cross section.
- Voltage supply negative via brown wire 2.5 mm cross section.
- If necessary, wire to terminal 15a via black wire 1.5 mm cross section.

8 Fuse holder
- Fit next to battery.

Protected by copyright. Copying for private or commercial purposes, in part or in whole, is not permitted unless authorised by Volkswagen AG. Volkswagen AG does not guarantee or accept any liability with respect to the correctness of information in this document. Copyright by Volkswagen AG.
satelettronica

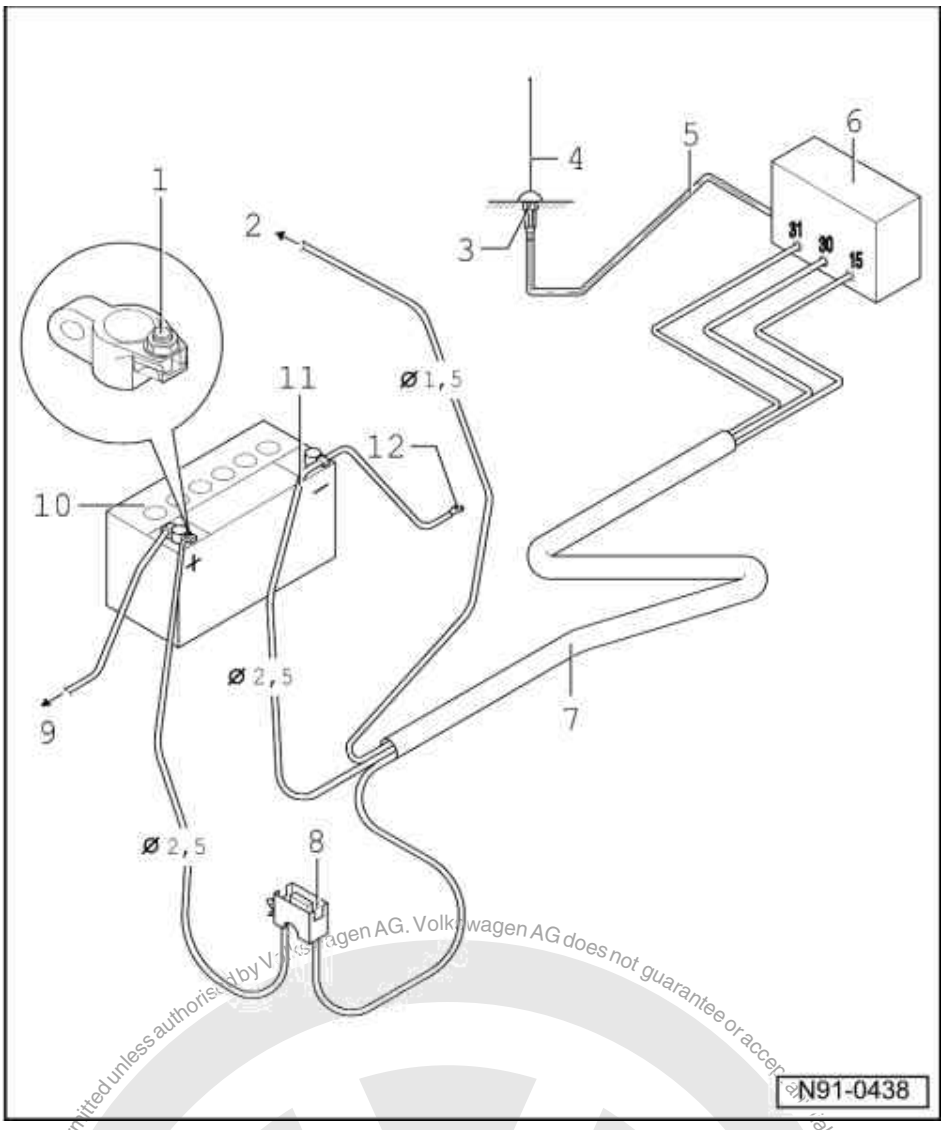

9 To starter
10 Battery
- Fitting location: in front left engine compartment.

11 Negative wire
12 Body earth

6.5 - Transmitted output and aerial fitting locations

Polo 1995 ▸

Designation	Pmax/Watt	Prescribed aerial fitting locations
Short wave < 54 MHZ	100 (PEAK)1)	Front centre of roof Centre of roof Rear centre of roof Rear bumper
4 m band	20 (eff.)2)	All locations (on vehicle exterior)
2 m band	20 (eff.)	Front wing Front centre of roof

Protected by copyright. Copying for private or commercial purposes, in part or whole, is not permitted unless authorised by Volkswagen AG. Volkswagen AG does not guarantee or accept any liability with respect to the correctness of information in this document. Copyright by Volkswagen AG.

satelettronica

Designation	Pmax/Watt	Prescribed aerial fitting locations
2 m band	50 (eff.)	Centre of roof Rear centre of roof
70 cm	50 (eff.)	Centre of roof Rear centre of roof
23 cm	20 (eff.)	Front centre of roof Centre of roof Rear centre of roof
TETRA/TETRAPOL	25 (eff.)	All locations (on vehicle exterior)

Designation	Pmax/Watt	Prescribed aerial fitting locations
D network GSM 900	20 (Peak)	All locations (on vehicle exterior)
E network GSM 1800 GSM 1900 UMTS	10 (Peak)	All locations (on vehicle exterior)

1) PEAK = max. output (Peak Envelope Power)

2) eff. = effective transmitted output

Note:

Deviations from these guidelines (location of aerial, frequency, output) are only permitted in special isolated cases after a single-case test carried out by the EMV centre of VW AG in Wolfsburg.

EMV = Electro-magnetic compatibility

7 - Suppression measures

7.1 - Suppression measures

The majority of the electrical consumers in the vehicle are suppressed for radio/navigation system as standard.

On vehicles with radio or prepared for radio the following components are additionally suppressed:

- Radiator fan -V7-
- Windscreen wiper motor -V-
- Rear window wiper motor -V12-

Additional earth connections on vehicle with radio or prepared for radio:

- Earth strap from left wheel housing to bonnet
- Earth strap from ignition transformer -N152 - to engine block (petrol engines only)

Protected by copyright. Copyright by Volkswagen AG. Volkswagen AG does not guarantee or accept any liability with respect to the correctness of information in this document. Copyright by Volkswagen AG.
satelettronica